http://ansinet.com/itj

ITJ

ISSN 1812-5638

INFORMATION TECHNOLOGY JOURNAL

ANSInet
Asian Network for Scientific Information
308 Lasani Town, Sargodha Road, Faisalabad - Pakistan

Information Technology Journal 13 (10): 1702-1708, 2014
ISSN 1812-5638 / DOI: 10.3923/itj.2014.1702.1708

AC/DC Converter AC Side Harmonic Wave Detection Based on Self-adaption Fuzzy PID Controlling

Li Jia-Sheng
College of Communication and Electronic Engineering, Hunan City University,
Hunan, 413000, Yiyang, China

Abstract: As AC/DC converter is a non-linear and time varying uncertain system, it is hard to reach the ideal control effect if adopting the routine Proportional Integral Differential (PID) control which is bad in dynamic property. A compound control scheme is proposed in this study which combines PID control and fuzzy self adaption. It takes error e and error variation ec as input and modifies PID parameter by using fuzzy control rule on line to satisfy the requirements of e and ec on PID parameter self tuning in different times. The experiment simulation indicates that the proposed scheme can minimize the AC side distortion factor and get better sine wave. Additionally, this scheme is simple, effective and practical in certain degree.

Key words: Fuzzy PID (proportional integral differential), AC/DC (alternating current/direct current) converter, harmonic wave, detection

INTRODUCTION

With the development of power electronic technology, three-phase voltage type AC/DC converter is widely applied in many engineering fields like AC speed control, Uninterruptible Power Supply (UPS), new energy etc., due to its advantages of controllable power factor, sine tendency of grid-side current, bidirectional flow of energy and the stability of DC side voltage (Zhang *et al*., 2009; Shaharurrizal *et al*., 2002). As AC/DC converter has realized the sinusoidal input current, moreover, it operates under unit power factor and the energy can transfer in two-way, therefore, it realizes "green power energy transformation" in the real sense (Hadian Amrei *et al*., 2007; Li *et al*., 2012). The core of AC/DC converter is current control. How to increase the power factor of AC/DC converter and improve the input current waveform is the target of people's pursuit (Zhao, 2006; Bai *et al*., 2009). As AC/DC converter is a non-linear and time varying uncertain system, it is hard to reach the ideal controlling effect and it is bad in dynamic property if employing the routine PID control. For this reason, scholars at home and abroad successively put forward some advanced control strategies for applying in the current control of AC/DC converter, such as variable structure control, SVPWM control and internal model control etc (Cheng *et al*., 2013).

Zhu *et al*. (2008) and Wu *et al*. (2005) adopted variable structure control method in AC/DC converter controlling which corresponds the switch changing of AC/DC converter to the system motor point of variable structure which change along the switching surface in high frequency (Tan *et al*., 2009; Zhang *et al*., 2012). This method is good in robustness and anti-interference capacity. In addition, it does not need online identification and easy to achieve. However, in this method the switch changing is too frequent and in high speed which would bring high frequency wobble even instability. The output ripple is relatively big and the requirements of sampling frequency are high. Furthermore, it is hard to select the ideal slip form switching surface and difficult to determine the parameters of each sub controller. Chen *et al*. (2007) and Zhou *et al*. (2010) put forward a SVPWM (Space Vector Pulse Width Modulation) new pattern harmonic wave analytical algorithm based on AC/DC converter, according to the working mechanism of SVPWM and combining the characters of digital implementation. This algorithm provides the analytical expressions of each harmonic wave of output phase voltage through Fourier analysis, as well as provides basis and guidance for designing the grid side filter inductance of AC/DC converter. Song and Yin (2012) applies internal model control to the current inner ring control of AC/DC converter. It replaces the traditional PI (Proportion Integration) regulator with inner model control which does not need the accurate model and parameter of the AC/DC converter and can reduce system regulation parameter so as to get rid of repeated trials. The AC/DC converter system it designed can guarantee high power factor and good input current sine wave. Besides, it can bear load and the disturbance of DC bus voltage and the current inner ring has good tacking and dynamic property

(Wang *et al*., 2010). But these control strategies mentioned above have some shortcomings and are hard to realize digitalization (Wang and Li, 2005). This study presents a compound control scheme by combining PID control and fuzzy self-adaption control. It can be turn out to have smaller harmonic distortion rate and has better sine wave on the AC side.

Utilize the basic theory and method of fuzzy mathematics, use fuzzy sets to present the condition and operation of rules, then save these fuzzy control rule and some related information (such as evaluation index, initial PID parameter) as knowledge into the computer knowledge base. In the next step, the computer can adjust the PID parameter to the best automatically according to the actual response situation of the control system (that is the input condition of the expert system) and applying fuzzy inference. What described above is method of fuzzy self-adaptation PID control.

MAIN CIRCUIT TOPOLOGICAL STRUCTURE OF AC/DC CONVERTER

The circuit topological structure of three phase voltage type AC/DC converter is as shown in Fig. 1. It consists of two parts-main circuit and control circuit (Wang, 2008). The main circuit includes AC side voltage source, the inductance of AC side L, system load resistance R, DC capacitor C and the three phase full bridge converter made up from all control switch device V1-V6 and freewheel diode. The control circuit is mainly composed of control chip which can produce PWM (Pulse Width Modulation) modulating signal and related circuit. The function of control circuit is to provide PWM signal for controlling the cut-off of all control switch device. In Fig. 1, e_a, e_b, e_c are three-phase supply phase voltage, U_{ao}, U_{bo}, U_{co} are the three phase output voltage of AC/DC converter AC side and the neutral point 0 is the reference point. Suppose the grid voltage three phases are symmetry and stable, according to Kirchhoff Voltage Law and Fig. 1, system differential equations can be listed as follows:

$$\begin{cases} L\dfrac{di_a}{dt} + Ri_a = e_a - u_{a0} \\ L\dfrac{di_b}{dt} + Ri_b = e_b - u_{b0} \\ L\dfrac{di_c}{dt} + Ri_c = e_c - u_{c0} \end{cases} \tag{1}$$

Transform the Eq. 1 according to Laplace transformation, the three phase transfer function of the three-phase voltage type PWM rectifier abc can be gotten as follow:

$$\begin{cases} \dfrac{i_a(s)}{e_a(s) - u_{a0}(s)} = \dfrac{1}{Ls + R} \\ \dfrac{i_b(s)}{e_b(s) - u_{b0}(s)} = \dfrac{1}{Ls + R} \\ \dfrac{i_c(s)}{e_c(s) - u_{c0}(s)} = \dfrac{1}{Ls + R} \end{cases} \tag{2}$$

FUZZY SELF-ADAPTATION PID CONTROL STRUCTURE

Utilize the basic theory and method of fuzzy mathematics, use fuzzy sets to present the condition and

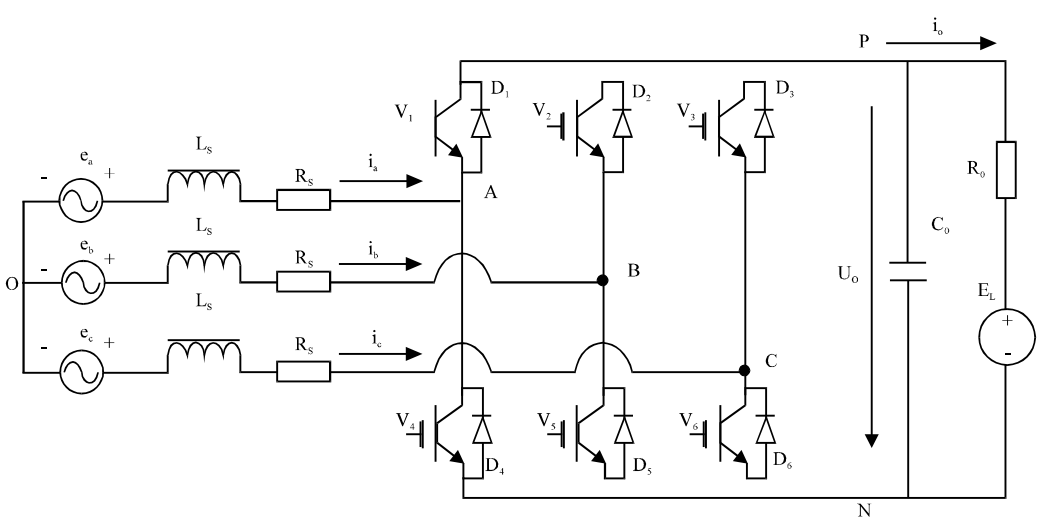

Fig. 1: Circuit topological structure chart of AC/DC converter

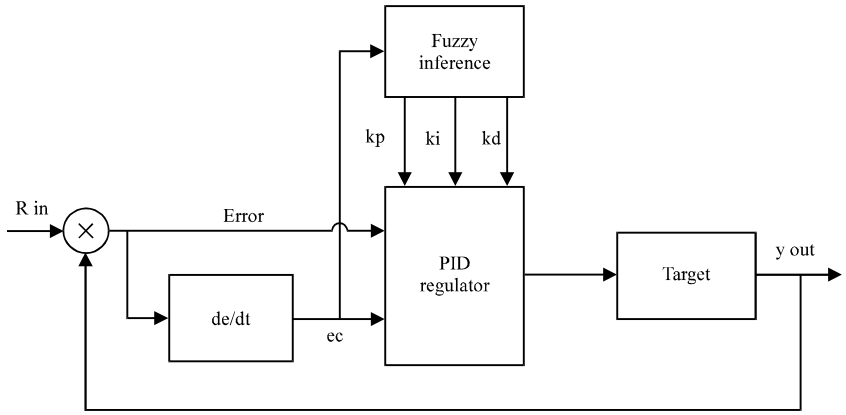

Fig. 2: Structure chart of self-adaption fuzzy controller

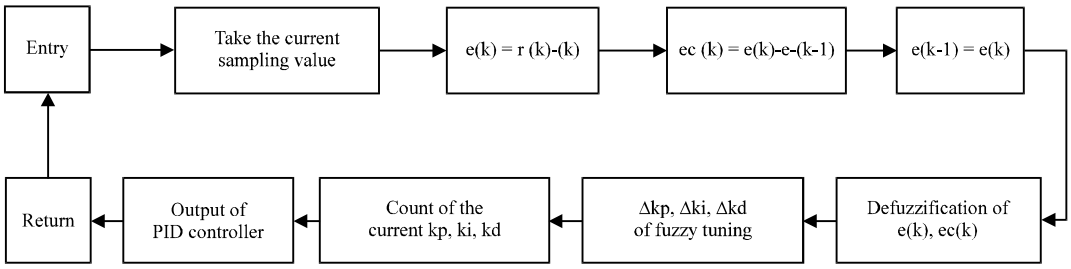

Fig. 3: Working procedure diagram of online self-correcting on Proportion Integration Differentiation (PID) parameter

operation of rules, then save these fuzzy control rule and some related information (such as evaluation index, initial PID parameter) as knowledge into the computer knowledge base. In the next step, the computer can adjust the PID parameter to the best automatically according to the actual response situation of the control system (that is the input condition of the expert system) and applying fuzzy inference. What described above is method of fuzzy self-adaptation PID control.

The self-adaption fuzzy PID controller takes error e (e is error in Fig. 2, e = r in-y out, it is error of PWM signal in this study) and error variation ec ec (ec = de/dt, it is change rate of PWM signal error in this study) as input-making use of fuzzy control rule online to modify PID parameter-to satisfy the requirement of e and ec on parameter self-tuning in different times. As a result, it constitutes self-adaption fuzzy PID controller, the structure of which is shown in Fig. 2.

PID control algorithm is:

$$u(k) = k_p e(k) + k_i T \sum_{j=0}^{k} e(j) + k_d \frac{e(k) - e(k-1)}{T}$$

In this equation, k is sampling sequence number and T is the sampling time.

PID parameter fuzzy self-tuning is to find out the fuzzy relation among the three parameters k_i, k_p, k_d of PID, e and ec and through constantly detecting e and ec in service to modify the three parameters on line according to fuzzy control principle, so as to meet the different requirements of different e and ec on control parameter and enable the controlled object has good dynamic and static property.

During online operation, according to the working procedure shown in Fig. 3, the control system completes online self-correcting on PID parameter through processing, table looking up and operating the results of fuzzy logic rules.

DESIGN OF FUZZY PID CONTROLLED AC/DC CONVERTER

Figure 4 shows the block diagram of AC/DC converter adopting self-adaption fuzzy PID control. It is composed of power frequency, rectified main circuit, filtration module, load and control module. The control module uses the fuzzy PID control as shown in Fig. 2.

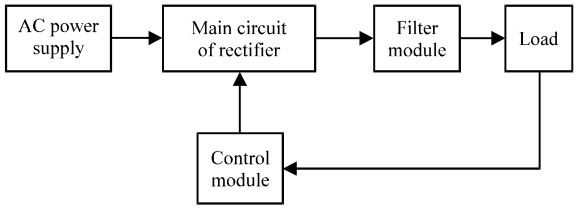

Fig. 4: Block diagram of fuzzy Proportion Integration Differentiation (PID) controlled AC/DC converter

SIMULATION AND ANALYSIS OF AC/DC CONVERTER WHICH ADOPTS SELF-ADAPTION FUZZY PID CONTROL

Figure 5 is the simulation diagram of AC/DC converter which adopts self-adaption fuzzy PID control. In the diagram, "380 V 30 MVA" is the AC power supply, the set values are as follows: Frequency is 50 Hz, line voltage is 380 V, capacity of short circuit is 30 MVA; B1 is the measuring module; Tr1 is a transformer, the transformer ratio is set as 380/240; L is the inductive resistance module; "Three-Level Bridge" is a three level converter; "Measurements and Signals" is the signal measuring module; the "discrete" module in the top left corner is a graphical user interface; "PWM Generator Subsystem" is a PWM generating control module controlled by fuzzy PID, whose inner structure diagram is shown in Fig. 6. In Fig. 6, "Fuzzy Logic Controller" is fuzzy logic control module; "PID Controller" is the PID control module and "Discrete PWM Generator" is the PWM generating module. The load resistance value in the diagram is set as 20 kW and the capacity value is set as 0.75 F.

Figure 7 is the AC/DC converter AC side voltage wave form after simulation and the FFT (fast fourier transform) analysis chart (The ordinate is the voltage (V), the abscissa is time (sec). In the above chart, the ordinate is amplitude, the abscissa is frequency (Hz) in the lower chart). From the chart it can be seen that the AC side voltage harmonic distortion rate Total Harmonic Distortion (THD) is 33.61%. Figure 8 is the AC/DC converter AC side current waveform after simulation and the FFT analysis chart (The ordinate is the current (A), the abscissa is time (sec). In the above chart, the ordinate

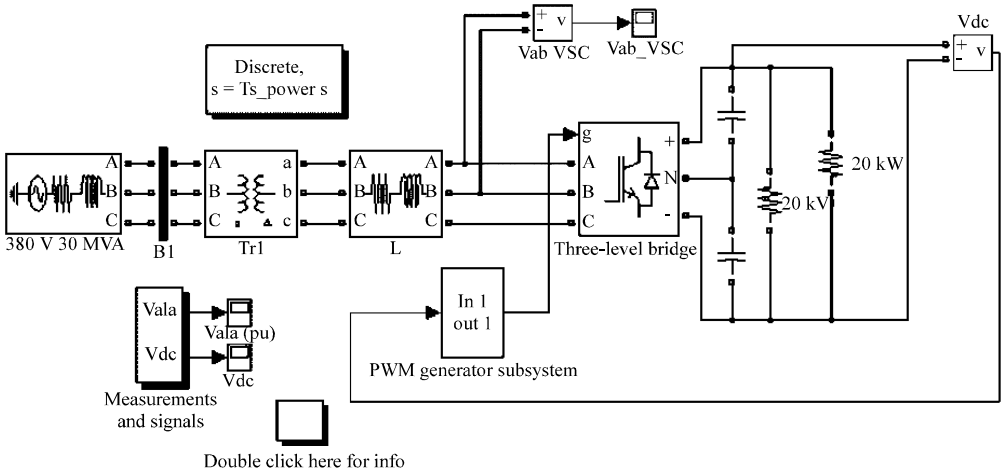

Fig. 5: Simulation diagram of AC/DC converter which adopts self-adaption fuzzy Proportion Integration Differentiation (PID) control

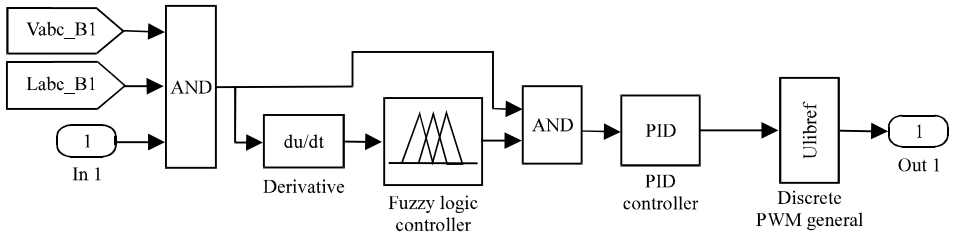

Fig. 6: Inner structure diagram of PWM (pulse width modulation) generator subsystem

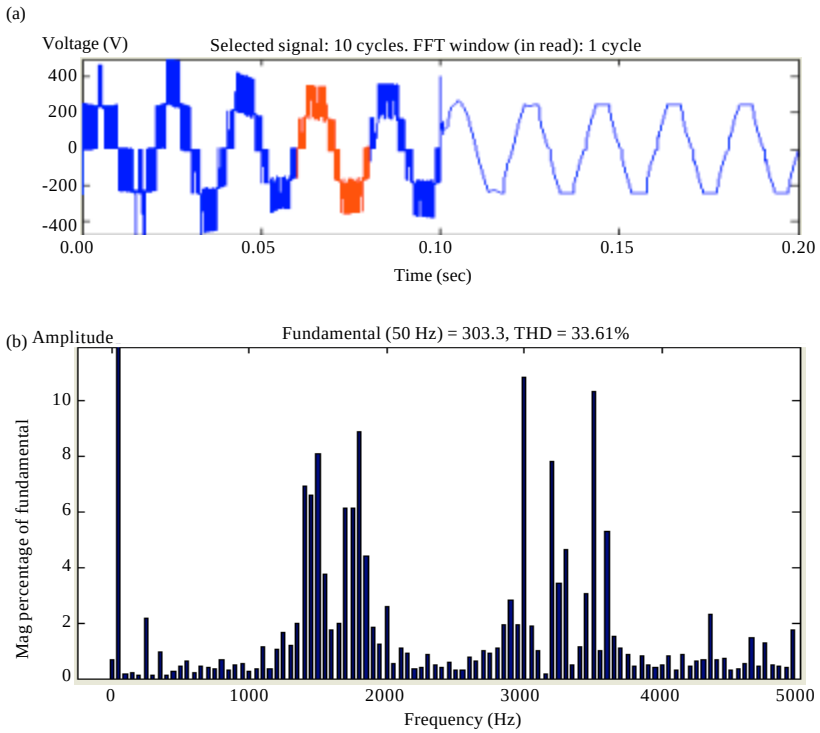

Fig. 7(a-b): AC/DC converter (a) AC side voltage waveform and (b) Fast Fourier Transform (FFT) analysis

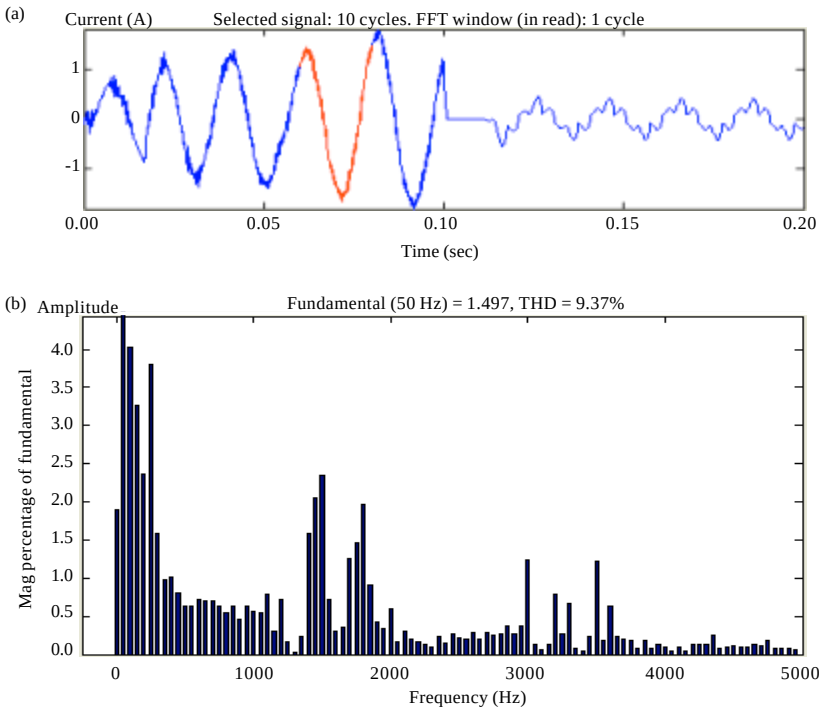

Fig. 8(a-b): AC/DC converter (a) AC side current waveform and (b) Fast Fourier Transform (FFT) analysis

Table 1: AC/DC converter AC side voltage and current harmonic distortion rate comparison of several different control strategies

Variables	SPWM (%)	SVPWM (%)	Inner module control (%)	Double closed loop control (%)	Self-adaptation fuzzy PID control (%)
Rectifier AC side voltage distortion rate	89.51	87.35	45.26	35.07	33.61
AC current harmonic distortion rate	31.96	31.67	26.53	54.24	9.37

is amplitude, the abscissa is frequency (Hz) in the lower chart). From this chart it can be seen that the AC current harmonic distortion rate THD is 9.37%. The current is somewhat distorted but basically approximate sine which illustrates that this control scheme is fairly successful.

AC SIDE VOLTAGE AND CURRENT HARMONIC DISTORTION RATE COMPARISON OF SEVERAL DIFFERENT CONTROL SCHEMES

In order to further illustrate the problem, in this study, it makes simulated comprehensive comparison of AC/DC converter adopting different control strategies. Table 1 shows when the system is given only DC resistive load, the AC side voltage wave harmonic distortion rate parameters comparison and AC current harmonic distortion rate parameters comparison of SPWM control, SVPWM control (Li *et al*., 2002), inner module control (Li and Li, 2007), double closed loop control and self-adaption PID control (Wang *et al*., 2006) (note: This 5 control strategy is introduced to see the corresponding references). From Table 1, it can be seen that the rectifier AC side voltage distortion rates controlled by four different controls are 89.51, 87.35, 45.26, 35.07 and 33.61% separately. The AC side waveform harmonic distortion rate of self-adaption PID control is the smallest. The rectifier AC current harmonic distortion rate of the four controls are 31.96, 31.67, 26.53, 54.24 and 9.37% respectively. The AC current harmonic distortion rate of self-adaption PID control is also the smallest.

CONCLUSION

Based on analyzing three-phase AC/DC converter mathematical model, this study compares the merits and demerits of present various kinds of control strategies. Making use of the advantages of self-adaption fuzzy control and PID control, it proposes a kind of compound control scheme which combines PID control and fuzzy self-adaption control. Then simulated verification is made on AC/DC converter and after comparing with other control strategies it turns out to have smaller distortion rate on the AC side and has better sine wave. It proves that this control strategy is feasible, simple and effective. This strategy can be used for reference in practice.

ACKNOWLEDGMENTS

This project has gained support from the Natural Science Foundation of Program in Hunan Province of China under Grant 13JJ6072. This project has gained support from Science and Technology Plan Project of Hunan Province. The project No. is 2011GK3067.

REFERENCES

Bai, L., F. Chen and X. Zeng, 2009. Fuzzy adaptive proportional integral and differential with modified smith predictor for micro assembly visual servoing. Inform. Technol. J., 8: 195-201.

Chen, Y., Y.B. Tong and X.M. Jin, 2007. A novel algorithm of SVPWM harmonic analysis based on PWM rectifier. Proc. CSEE, 27: 76-80.

Cheng, Q.M., Y.M. Cheng, H.L. Wang, X.Q. Hu and Y.F. Bai, 2013. Development review of control methods for three-phase current-source PWM rectifiers. East China Electr. Power, 41: 405-411.

Hadian Amrei, S.R., D.G. Xu and Y.Q. Lang, 2007. A new direct power control for PWM rectifier. Proc. CSEE, 27: 78-84.

Li, S.Z., Y.X. Pan and J.Q. Lu, 2002. A active control method used for PWM rectifier. Power Electron., 36: 17-18.

Li, Q. and Y.D. Li, 2007. Research on close-loop control of three-phase PWM rectifier. Electric Drive, 37: 18-21.

Li, J., W. Xiao, X. Zhang, W. Li and S. Hu, 2012. Denoising of power quality disturbance based on self-adapting neural fuzzy control. Inform. Technol. J., 11: 1632-1637.

Shaharurrizal, M., B.M.W. Farrah, D. Herman, A. Arunagiri and S. Morris, 2002. Fuzzy logic simulation to process control systems. Inform. Technol. J., 1: 272-279.

Song, W.X. and Y. Yin, 2012. A control strategy of three-phase PWM rectifier based on internal model control. Trans. China Electrotech. Soc., 27: 94-101.

Tan, L.C., Y.H. Li, P. Wang and C.W. Liu, 2009. Novel power factor control method for three phase pulse width modulation current source rectifier. Proc. CSEE, 29: 43-49.

Wang, J.H. and H.D. Li, 2005. A new direct power control strategy of three phase boost type PWM rectifiers. Proc. CSEE, 25: 47-52.

Wang, J.H., H.D. Li and L.M. Wang, 2006. Direct power control system of three phase Boost type PWM rectifiers. Proc. Chin. Soc. Electr. Eng., 26: 54-60.

Wang, J.R., 2008. Modeling and simulation of three-phase voltage source PWM rectifier with voltage space vector control. World Inverters, 12: 57-59.

Wang, W., H. Yin and L. Guan, 2010. Parameter setting for double closed-loop vector control of voltage source PWM rectifier. Trans. China Electrotech. Soc., 25: 67-72.

Wu, X.J., Y.H. Luo and S.T. Qiao, 2005. A control technical summary of three-phase voltage-source PWM rectifiers. Trans. China Electrotech. Soc., 20: 7-12.

Zhang, X.D., B.S. Wang and J.W. Zhang, 2009. Design and simulation of double closed-loop pi regulator of three-phase voltage source rectifier control system. Electr. Meas. Instrum., 46: 73-76.

Zhang, H., G.J. Tan, M.W. Qian and R.W. Yu, 2012. Study of three-phase PWM rectifier based on a mixture of H8 control and optimal tracking control. Trans. China Electrotech. Soc., 27: 102-108.

Zhao, K.Y., 2006. PWM rectifier with fuzzy sliding mode variable structure control. Trans. China Electrotech. Soc., 21: 49-53.

Zhou, X., Y.B. Guo, X.H. Zhang and H.J. Chen, 2010. Three-phase voltage-type PWM rectifier based on adaptive tracking control. Proc. CSEE, 30: 76-82.

Zhu, X.R., H.M. Li, Y.L. Peng and X.C. Shi, 2008. A control scheme of current-source PWM rectifier with sliding-mode control under unbalanced operation conditions. Proceedings of the 3rd International Conference on Electric Utility Deregulation and Restructuring and Power Technologies, April 6-9, 2008, Nanjuing, China, pp: 2121-2126.