Journal of Applied Sciences

ISSN 1812-5654

science alert

ANSInet
an open access publisher
http://ansinet.com

Journal of Applied Sciences 7 (23): 3705-3712, 2007
ISSN 1812-5654

Crosstalk Penalty in an OXC with Wavelength Converter in the Presence of Interferometric Intensity-Relative Output-ASE Noises

[1]Yasin M. Karfaa, [1]M. Ismail, [2]F.M. Abbou, [1]S. Shaari and [3]S.P. Majumder
[1]Departtment of Electrical Electronics and Systems Engineering,
Universiti Kebangsaan Malaysia, 43600 UKM Bangi Selangor, Malaysia
[2]Faculty of Engineering, Multimedia University, 63100 Selangor, Cyberjaya, Malaysia
[3]Department of Electrical and Electronics Engineering,
Bangladesh University of Engineering and Technology, Dhaka-1000, Bangladesh

Abstract: A semi analytical analysis is carried out to investigate the effect of linear crosstalk due to wavelength converters and other Wavelength Division Multiplexing (WDM) components in the presence of interferometric intensity noise and amplified spontaneous emission on the performance of an optical multi-wavelength transport network employing wavelength converters based on XPM in a Single Mode Fiber (SMF) and Mach-Zehnder Interferometer (MZI), where a new parameter names Relative Output Noise (RON) is identified and accounted for. Theoretical study is done for the Bit Error Rate (BER) performance analysis due to crosstalk and ASE noise. It is found that linear crosstalk induces higher penalty when the number of transmitted channels is increased in the presence of all the above effects. The conditions for conversion at 10 Gbps or more are identified. The initial results for monolithic integrated interferometric wavelength converters are reviewed by transmission of 10 Gb/s converted signals over non-dispersion shifted single mode fiber.

Key words: Optical cross-connect, wavelength division multiplexing, crosstalk, BER, wavelength converter, interferometric intensity noise, relative output noise

INTRODUCTION

ALL optical wavelength conversion is considered as a key function for the future WDM lightwave systems and the use of techniques like cross gain modulation (XGM), cross-phase modulation (XPM) and four wave mixing (FWM) with high bit rate and efficient conversion has been demonstrated in a variety of passive or active media (Simos *et al*., 2007; Iannone *et al*., 1996). The transparent all-optical networks and so wavelength converters are often believed to be the key to future broadband communications. They are based on optical amplifiers, optical cross-connects and optical add/drop multiplexers would ensure an easily upgradable system with transparent optical paths from transmitter to receiver (Eilenberger *et al*., 1996). Future optical transport networks will exploit the benefits of optical transparency offering high flexibility versus bit rates, signal formats and protocols as well as benefits from WDM techniques for transmission and routing (Ohlen and Berglind, 1997). WDM is a technique to increase the information capacity of a fiber by transmitting a number of optical signals of different wavelengths simultaneously over the same fiber. This is intended to utilize the vast bandwidth of a fiber optic, since an optical source only uses a small portion of the bandwidth. WDM networks are very promising not only due to their large bandwidth but also the flexibility and possibility of upgrading the existing optical fiber networks to WDM networks (Sim *et al*., 2006, 2007). Optical cross-connect is an essential network element in WDM optical network (Shen *et al*., 1999). Wavelength converters are often desired in the OXC to make the network management much easier and for their signal regeneration and noise reduction capabilities and their most important use will be for avoidance of wavelength blocking or to reduce its occurrence in optical cross connects in Wavelength Division Multiplexed (WDM) networks. The converters increase the flexibility and the capacity of the network for a fixed set of wavelengths (Durhuus *et al*., 1996; Sim *et al*., 2006, 2007). Equally important is the wavelength conversion function that enables decentralized network management concerning the wavelength paths through the network and may facilitate easier protection switching. The potential of wavelength converters has already been demonstrated in a number of system experiments. Tunable wavelength

Corresponding Author: Yasin M. Karfaa, Departtment of Electrical Electronics and Systems Engineering,
Universiti Kebangsaan Malaysia, 43600 UKM Bangi Selangor, Malaysia

converters together with an array of fixed output filters are used to construct efficient optical space switches. This application of converters has been employed for internal routing in a complex optical ATM switch block as came in literature. Wavelength conversion is a very useful function in advanced optical systems.

Optical cross connects with wavelength converters is the only OXC topology that needs tunable filters, while the filters used in the other types of topologies have a fixed centre frequency (Gyselings *et al*., 1999). The requirements to the converters will be system dependent, but preferably the converters should feature the following: Bit-rate transparency; no extinction ratio degradation; high signal-to-noise ratio at the output; moderate input power levels; large wavelength span for both input and output signals; possibility for same input and output wavelengths (no conversion); low chirp; fast setup time of output wavelength; Insensitivity to input signal polarization and simple implementation (Durhuus *et al*., 1996).

Several topologies exist for all optical WDM cross connects and several techniques have been proposed to achieve wavelength conversion where the most suitable topology for an application depends in general on the required functionality and on the cost, capacity and flexibility constraints. Optical amplifiers are used to compensate for transmission and splitting losses. However, multichannel amplification can create system penalties due to crosstalk and intermodulation distortion (IMD) depending on the chosen modulation scheme and channel separation (Durhuus *et al*., 1992).

The wavelength conversion technique based on four-wave mixing in SOA's (not considered here), is attractive because of transparency to modulation format as well as high bit rate capabilities. Unfortunately the conversion efficiency for this scheme is not very high and it decreases swiftly with increasing conversion span, beside the difficulty to cascade more converters and the Optical Signal-to-Noise Ratio (OSNR) degradation due to the Amplified Spontaneous Emission (ASE). In general the spontaneous emission perturbs both the amplitude and phase of the converted signal, resulting to its intensity and phase noise degradation. The latter has already been investigated by measuring the increase in the linewidth of the converted signal, relative to that in the input. On the contrary the Relative Intensity Noise (RIN) properties of the FWM converted signal have not been investigated up to now, neither theoretically nor experimentally. Such an investigation is very useful since RIN affects the performance of lightwave systems using intensity modulation (Simos *et al*., 2007).

OXC while cross-connecting wavelengths from input to output fibers, introduces crosstalk. Crosstalk is one of the basic criteria that characterize the performance of WDM network (Keiser, 2000). Crosstalk leads to transfer of power from one channel to another. Crosstalk can be classified as linear and non-linear. Linear crosstalk occurs due to channel-selection devices such as due to the imperfect nature of de-multiplexing components used; which in this case are the arrays of power splitter (Agrawal, 2002). High crosstalk in optical cross-connect (OXC) has so far prevented commercial use of all-optical OXC in WDM networks.

Justification of the investigation: Since optical crosstalk is a major limiting factor to the implementation of optical cross-connect (OXC) in WDM networks (Zhou *et al*., 1996), this paper is aimed to address a few issues on crosstalk in the OXC using the findings of several researches like (Gyselings *et al*., 1999) that did the wavelength converter's linear crosstalk without considering the Interferometric Intensity Noise (IIN), or the Relative Output Noise (RON). Iannone *et al*. (1996) studied other types of problems and components crosstalk. Shen *et al*. (1999) did the general crosstalk study for optical networks or add/drop multiplexers in other works. Sim *et al*. (2006, 2007) did the wavelength converter's linear crosstalk without considering the Interferometric Intensity Noise (IIN) or the Relative Output Noise (RON). Simos *et al*. (2007) investigated the Relative Intensity Noise (RIN) performance of different technique based wavelength converters, whilst the studies done by (Takahashi *et al*., 1996) were about the crosstalk in the array waveguide multiplexer and not the OXC. Zhou *et al*. (1996) did the crosstalk in the general OXC but not the wavelength converter. The other works explored various other problems. In this paper, we are reporting for the first time to our knowledge the combined effects of both of the crosstalk from one side and the Interferometric Intensity Noise (IIN), Relative Output Noise (RON) and accumulated ASE noise with increasing number of nodes at the same time. This is a complementary work with the previous work (Karfaa *et al*., 2005) and so to use those findings for further investigation since the crosstalk was not considered there and to further test the latter when introducing the crosstalk. The factors are: the accumulated ASE noise with increasing number of nodes, the noise variance in the wavelength converters that is the interferometric intensity noise due to the components and the Mach-Zehnder Interferometer (MZI) and the Relative Output Noise (RON). In this study, crosstalk in OXC with wavelength converter and how it influences BER in the presence of

the above three factors will be discussed, beside the interactions amongst all the above that produce beat terms are considered. The investigation is taking the approach of Simos *et al*. (2007) from the other end. Hence, instead of using RIN (the input side), we use the RON (the output side).

MODELING AND SIMULATION

Topology for OXC-wavelength converter: The OXC with wavelength converter shown in Fig. 1 and 2 from Gyselings *et al*. (1999), uses a combination of space and wavelength switching. Incoming signals are split by a first array of power splitters followed by a second array of power splitters. In GC-SOA gates, all channels are present. The gate selects the wavelength that carries the desired channel. Channels of same wavelength must not enter the output fiber together. A wavelength converter is used to convert channels of one wavelength to other wavelength.

OXC-Wavelength converter crosstalk noise mathematical model: Here, crosstalk model for OXC with wavelength converter (Gyselings *et al*. 1999) is being discussed. Then, the model is extended to BER model.

Crosstalk model is based on the OXC in Fig.1. If P_{SS_in} is the input power of a channel, then $P_{SS\_out1\_g}$ is as shown in (1) based on [1]. $P_{SS\_out1\_g}$ is defined as the output power of wavelength channel i_o with crosstalk contributions added (with all wavelength channels carrying bit 1), where the subscript g is for the gate. T_F is filter transmission, R_{xg} is gate extinction ratio and X_g is gate crosstalk. N is the number of input fiber into OXC in Fig. 1. M is the number of wavelengths per input fiber.

$$
\begin{aligned}
P_{SS1\_out\_g} &= P_{SS\_in} + P_{SS\_in} \times \left\{ X_g \begin{bmatrix} (M-1)P_{SD\_in} + \\ P_{SS\_in} \end{bmatrix} \right\} \\
&+ + P_{DS\_in} \left\{ \begin{matrix} (N-1)R_{xg}\left[1 + X_g M P_{DD\_in}\right] + (M-1)T_F \\ \left[1 + X_g M P_{DD\_in}\right] + (N-1)(M-1)^2 T_F R_{xg} \end{matrix} \right\} \\
&-2\sqrt{P_{SS\_in}}\sqrt{P_{DS\_in}} \left\{ \begin{matrix} (N-1)\sqrt{R_{xg}} + (M-1)\sqrt{T_F} + \\ (N-1)(M-1)\sqrt{R_{xg}}\sqrt{T_F} \end{matrix} \right\} - \\
&2P_{DS\_in} \left\{ \begin{matrix} (N-1)(M-1)\sqrt{R_{xg}}\sqrt{T_F} + (N-1)^2(M-1) \\ R_{xg}\sqrt{T_F} + (N-1)(M-1)^2\sqrt{R_{xg}}T_F \end{matrix} \right\} - \\
&2P_{DS\_in} \left\{ R_{xg}\sum_{t=1}^{N-2} t + T_F \sum_{t=1}^{M-2} t + R_{xg}T_F \sum_{t=1}^{(M-1)(N-1)-1} t \right\}
\end{aligned}
\tag{1}
$$

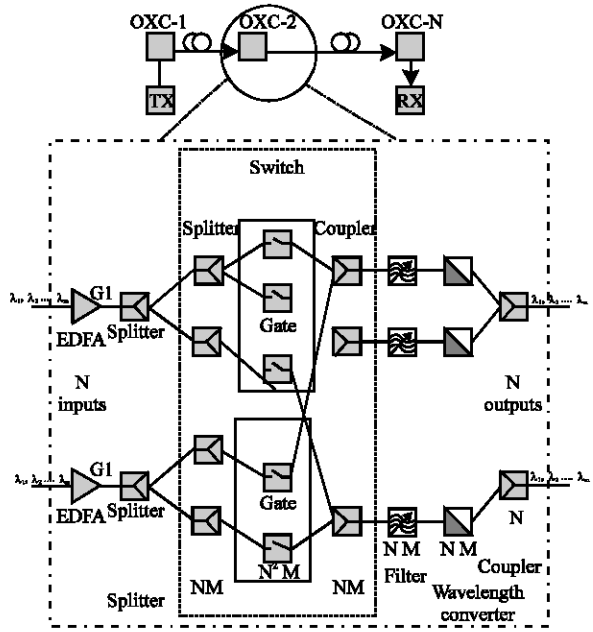

Fig. 1: Structure of an optical cross-connect with wavelength converter (OXC-WC)

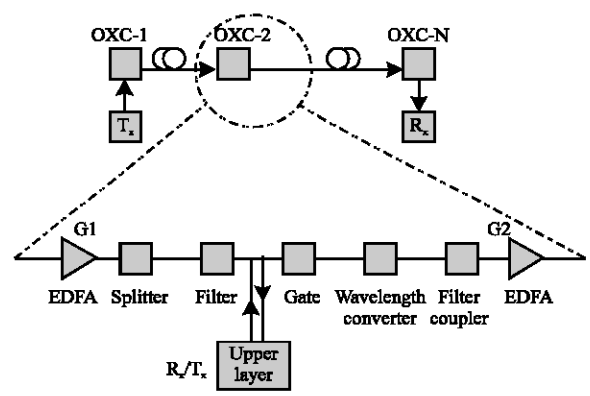

Fig. 2: OXC-WC for point-to-point optical WDM network

P_{SD_in} is the signal power at same fiber j_o with different wavelength i. P_{DS_in} is the signal power at different fiber j that carries the same wavelength under consideration, i_o. P_{DD_in} is the signal power at different fiber j with different wavelengths, i.

$$P_{SS} = P_{in} \times \frac{1}{M},\ P_{SD} = (M-1) \times P_{in} \times \frac{1}{M},$$

$$P_{DS} = (N-1) \times P_{in} \times \frac{1}{M},\ P_{DD} = (M-1)(N-1) \times P_{in} \times \frac{1}{M}$$

$$P_{SS\_in} = P_{SS},\ P_{SD\_in} = P_{SD},\ P_{DS\_in} = P_{DS},\ P_{DD\_in} = P_{DD}.$$

Where:

$P_{SS1\_g(ref)}$ The gate reference power for bit "1" (no crosstalk)

The gate power (with crosstalk):

$$P_{SS0\_out\_g} = P_{DS\_in}\begin{Bmatrix}(N-1)R_{xg}\left[1+X_gMP_{DD\_in}\right]+\\(M-1)T_F\left[1+X_gMP_{DD\_in}\right]+\\(N-1)(M-1)^2T_FR_{xg}\end{Bmatrix}+$$
$$-2P_{DS\_in}\begin{Bmatrix}(N-1)(M-1)\sqrt{R_{xg}}\sqrt{T_F}+\\(N-1)^2(M-1)R_{xg}\sqrt{T_F}+\\(N-1)(M-1)^2\sqrt{R_{xg}}T_F\end{Bmatrix}-2P_{DS\_in}$$
$$\left\{R_{xg}\sum_{t=1}^{N-2}t+T_F\sum_{t=1}^{M-2}t+R_{xg}T_F\sum_{t=1}^{(M-1)(N-1)-1}t\right\} \quad (2)$$

All the powers are passed through the gates, then the wavelength converter and the output is taken as the overall output. The crosstalk is defined as in (Gyselings *et al*., 1999).

$$\text{Crosstalk(dB)} = 10\log_{10}\left[\frac{P_{SS1\_out(ref)\_WC} - P_{SS1\_out\_WC}}{P_{SS1\_out(ref)\_WC}}\right] \quad (3)$$

The crosstalk model for OXC without wavelength converter is then extended to BER model. BER is given by Eq. 4. The equation represents two states of transmission: bit 1 for 'ON' state and bit '0' for 'OFF' state as reported by (Agrawal, 2002).

Receiver bit error rate model: The BER at node, n for $\sigma_1 \neq \sigma_i$ after some modification of the one that was given by (Takahashi *et al*., 1996), using RON instead of RIN with proper changes:

$$\text{BER}(n) = \frac{1}{4}\left[\begin{array}{l}\text{erfc}\left(\dfrac{I_1 - I_D}{\sigma_1\sqrt{2}}\right)+\\ \text{erfc}\left(\dfrac{I_D - I_0}{\sqrt{2\{\sigma_0^2 + \text{RON(v)}\ I_1^2\}}}\right)\end{array}\right] \quad (4)$$

Where, $I_D = (\sigma_0 I_1 + \sigma_1 I_0)/(\sigma_0 + \sigma_1)$.

$$\sigma_1^2 = \sigma_{shot}^2 + \sigma_{ASE-B}^2 + \sigma_{IINWC}^2 + \sigma_{IINWC-XTWC1}^2 + \sigma_{XTWC1-Sig}^2 \quad (5)$$

$$\sigma_{ASE\_B}^2 = \sigma_{ASE-shot}^2 + \sigma_{ASE-Sig}^2 + \sigma_{ASE-XTWC1}^2 + \sigma_{ASE-ASE}^2 \quad (6)$$

$$\sigma_{IINWC-XTWC1}^2 = R_d^2\sigma_{XTWC1}^2 \times \sigma_{IINWC}^2 \quad (7)$$

$$\sigma_0^2 = \sigma_{th}^2 + \sigma_{ASE-ASE}^2 + \sigma_{ASE\_XTWC0}^2 + \sigma_{IINWC\_XTWC0}^2 \quad (8)$$

Where, $\sigma_{XTWC1}^2 = P_{XT1}$ represents the crosstalk power for the wavelength converter when bit 1 is transmitted. σ_{IINWC}^2 is the interferometric noise accumulated from the wavelength converter co-propagating with a traveling light-wave signal from all the N_d OXCs as was calculated previously in Karfaa *et al*. (2005) and the network (Fig. 2), while the expression is attached in the Appendix 2. $\sigma_{IINWC-XTWC1}^2$ is the beat between σ_{IINWC}^2 and σ_{XTWC1}^2. The ASE-shot beat is:

$$\sigma_{ASE-shot}^2 = 4eR_dP_{ASE}B_oB_e$$

and the other beat terms are in Eq. 9, 10 and 11 with some modifications (Steele *et al*., 1991):

$$\sigma_{ASE-Sig}^2 = 4R_d^2P_{rec\_WC}P_{ASE}B_e \quad (9)$$

$$\sigma_{ASE-XTWC1}^2 = R_d^2P_{XT1}P_{ASE}B_e \quad (10)$$

$$\sigma_{XTWC1-Sig}^2 = R_d^2P_{rec\_WC}P_{XT1} \quad (11)$$

Where:

e	=	The electronic charge = 1.602×10^{-19}C,
R_d	=	The receiver responsivity (at 1A/W for this paper),
K	=	The Boltzman constant = 1.380658×10^{-23},
T	=	The temperature in Kelvin (T=300 Kelvin in this paper),
B_e	=	The filter bandwidth (B_e = 10 GHz in this study, which equals to the bit rate used,
R_L	=	The receiver front end load (R_L=50Ω in this study),
RON(v)	=	The relative output noise (Appendix 1), is used to express wavelength converter noise variance.

The parameter v represents the optical signal frequency, while the optical bandwidth is B. $\sigma_{XTWC0}^2 = P_{XT0}$ represents the crosstalk power for the wavelength converter for the OFF state (when bit 0 is transmitted). The previous work derived the beat terms as follows (Karfaa *et al*., 2005):

$$I^2_{ASE-ASE} = \frac{1}{2\pi} R_d^2 P_{ASE} B_e [1 + \frac{1}{(1+D^2)}] \times \frac{1}{\sqrt{1+D^2}} \times \frac{1}{[1 + \{\frac{D}{2}\}^2 \{\frac{D^2}{1+D^2}\} \sin^2(\frac{B_e}{2FSR})]} \quad (12)$$

Where, $D^2 = \frac{4R}{(1-R)^2} = \frac{4F^2}{\pi^2}$, $F = \frac{\pi\sqrt{R}}{1-R}$ and $L_{FP} = \frac{c}{2FSR}$ are as in (Agrawal, 2002).

Where:
F = The finesse,
R = The facet power efficiency,
FSR = The free spectral range of the Fabry-Perot filter,
L_{FP} = The effective length of the Fabry-Perot etalon.

This gives the noise variance of the amplified spontaneous emission with itself (Karfaa *et al*., 2005):

$$\sigma^2_{ASE-ASE} = \frac{I^2_{ASE-ASE}}{4R_d^2} \quad (13)$$

$$\sigma^2_{ASE\_XTWC0} = 2eR_d P_{ASE} P_{XTWC0} B_e \quad (14)$$

$$\sigma^2_{IINWC\_XTWC0} = 2eR_d \sigma^2_{IINWC} P_{XTWC0} B_e \quad (15)$$

The photocurrent for a transmitted bit 0, $I_0 = 0$, while for bit 1, the I_1 is given by Eq. 16. For transmitted bit 0, photocurrent I_0 is assumed to be zero.

$$I_1 = 2R_d P_{rec\_WC} \quad (16)$$

Hence the crosstalk powers for transmitted bit 0 and bit 1 that appear at the output of the wavelength converter is given by:

$$P_{XT0} = -P_{SS0\_out\_WC} \quad (17)$$

$$P_{XT1} = P_{SS1\_out(ref)\_WC} - P_{SS1\_out\_WC} \quad (18)$$

OXC ASE and interferometric intensity noise model modification: The earlier study used the network (Fig. 2) gives the following series of expressions for interferometric intensity noise variance at the output of the wavelength converter and amplified spontaneous emission noise variance as follows (Karfaa *et al*., 2005):

For a 0 transmission, $\sigma^2_{WC} = 0$ since RON(v) = 0. Using the precise expression for RON(v) gives a precise value for interferometric intensity noise variance due to wavelength converter in an open form (Karfaa *et al*., 2005). Where the closed form for relative output noise power spectral density RON(v) that appears after the wavelength converter is shown in appendix 1 and is used to obtain the variance of the interferometric intensity noise for the wavelength converter σ_{IINWC}^2 for the FSR ranges that are less than 1 GHz or more than 30 GHz that is shown in Eq. 19. Then, the range 1 to 30 GHz is not depending on RON(v) and shown in Appendix 2, after re-writing and simplifying them from the earlier studies (Karfaa *et al*., 2005):

$$\sigma^2_{IINWC} = 2N_d \left(R_d P_{rec\_WC}\right)^2 RON(\nu) B_e \quad (19)$$

Two EDFA's in the OXC where ASE noise with power spectral densities are given by:

$$P_{ASE1}(\nu) = F_e(G_1 - 1)h\nu L_1 L_2 \eta_{WC} G_2 \quad (20)$$

$$P_{ASE2}(\nu) = F_e(G_2 - 1)h\nu \quad (21)$$

$$P_{ASE1\_2}(\nu) = P_{ASE1}(\nu) + P_{ASE2}(\nu) \quad (22)$$

$$P_{ASE}(\nu) = P_{ASE2}(\nu) + (N_d - 2)P_{ASE1\_2}(\nu) + F_e(G_1 - 1)h\nu L_1 \quad (23)$$

$P_{ASE(V)}$ for number of nodes from N_{nd} = 1 until and n = N_d is expressed as:

$$P_{ASE}(\nu) = P_{ASE2}(\nu) \text{ for } n = 1 \quad (24)$$

$$P_{ASE}(\nu) = P_{ASE2}(\nu) + (N_d - 2)P_{ASE1\_2}(\nu) + F_e(G_1 - 1)h\nu \text{ for } n = 2, 3, \ldots N_d \quad (25)$$

Where:
F_e = The EDFA inversion factor (F_e = 3 for this study),
G_1 and G_2 = The (no dB) gains of the first and second EDFA and are both assumed as: (G_1_dB = G_2_dB = 20 dB),
L_1 and L_2 = The losses associated with the splitter/filter and filter/coupler respectively,
η_{WC} = The conversion efficiency of the wavelength converter and is assumed to be 0.9,
v = The optical center frequency at wavelength $\lambda = 1.55$ μm ($v = 1.9355 \times 10^{14}$ for this study),
h = The Plank's constant = 6.6261×10^{-34}. Rewriting the Eq. 38 for $G_1 = G_2 = G$, the simplified expression is obtained for 2 nodes or more:

Table 1: The input parameters that are used in the simulation

Parameters	Values
No. of wavelength (M)	128.0
Filter transmission (Tf) (dB)	-37.0
Number of input fiber (N)	5.0
Gate extinction ratio (Rxg) (dB)	-46.6
Total Input power (Pin) (dBm)	0.0
Gate crosstalk (Xg) (dB)	-0.1
Temperature (T)	300.0
Bandwidth (B) (GHz)	10.0
Receiver load (RL) (Ω)	50.0
Receiver responsivity (Rd) (A/W)	1.0
Inversion factor (F)	3.0
Amplifier gain (G) (dB)	20.0

$$P_{ASE}(\nu) = [F_e h\nu(G - 1) \times \{1 + (n-2)(1 + (N-2)((L_1 L_2 \eta_{WC} G + 1) + L_1) + L_1\}] \text{ for } n = 2, 3, \ldots N_d \quad (26)$$

Parameters used for analysis are shown in Table 1.

RESULTS AND DISCUSSION

Following the analytical formulation presented in previous sections, performance results on the effect of the OXC induced noise is presented next. Figure 3, BER versus number of nodes for various fiber numbers with the FSR of the MZI at 30 GHz and using a bit rate of 10 Gbps. From the figure, we can see that transmission over more nodes (OXCs) number lead to a higher power penalty due to the accumulation of noise induced at each node and OXC. The accumulated noise consists of the ASE noise with the beat terms and the noise from the MZI including a small part of the crosstalk. The dominant noise source at the receiver is the beating of the accumulated ASE noise with the signal. The cumulative ASE noise increases with the number of OXCs traversed across, N and gives rise to a receiver sensitivity as well (Fig. 8, 9). The interferometric intensity noise from the MZI (Fig. 4-6) was insignificant at the receiver, being smaller than both the thermal and ASE noise.

Figure 4 shows the interferometric intensity noise versus received power for various number of nodes. More node number make more noise.

Figure 5 shows the interferometric intensity noise versus received power for various bit rates. More bit rates make more noise.

Figure 6 shows the interferometric intensity noise versus relative output noise. They are both having a proportional relation but not linear. So, they increase together.

In the above three figures for a system in which the ASE noise induced by all the amplifiers has been ignored. In order to study the effects of the MZI interferometric noise, we had to remove the ASE noise sources as the

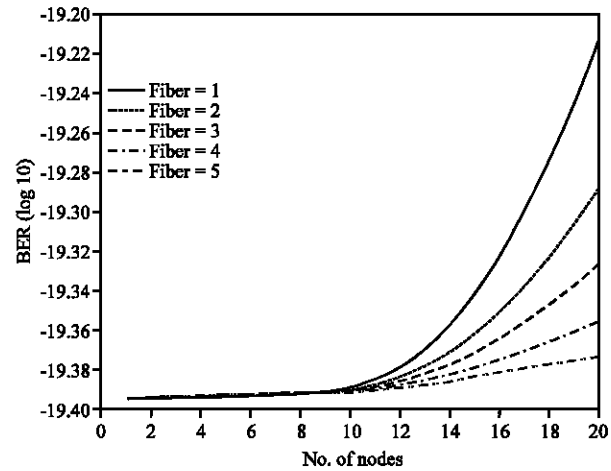

Fig. 3: BER versus number of nodes for various fiber numbers where FSR = 30 GHz

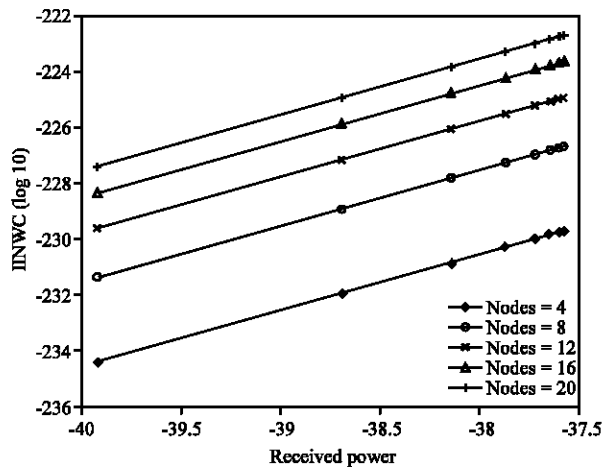

Fig. 4: Interferometric intensity noise versus received power for various numbers of nodes where FSR = 30

ASE noise always dominated the noise from the MZI as shown earlier. With this, we examined when the effects of the MZI interferometric noise becomes significant compared to the thermal and shot noise.

The MZI interferometric noise only becomes significant for very low FSR beginning at values below 0.01 GHz. At these very low values of FSR, the penalty increases quickly with decreasing FSR. However, the 0.01 GHz level and below is not required by most practical applications.

The linear crosstalk versus number of channels nodes for various fiber numbers with other parameters are same as before (Fig. 7). As the signal is transmitted through more fiber numbers, the crosstalk is minimized. This is because the signal channels get more separation.

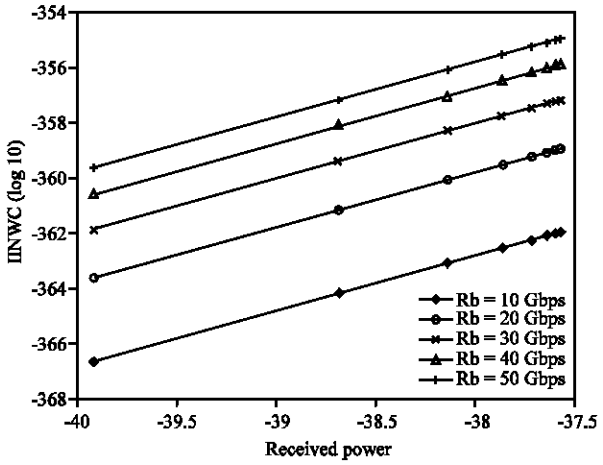

Fig. 5: Interferometric intensity noise versus received power for various bit rates where FSR = 100

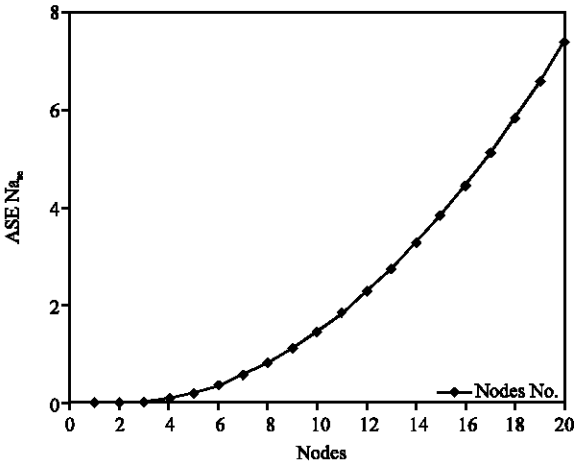

Fig. 8: The amplified spontaneous emission noise (ASE) versus number of nodes

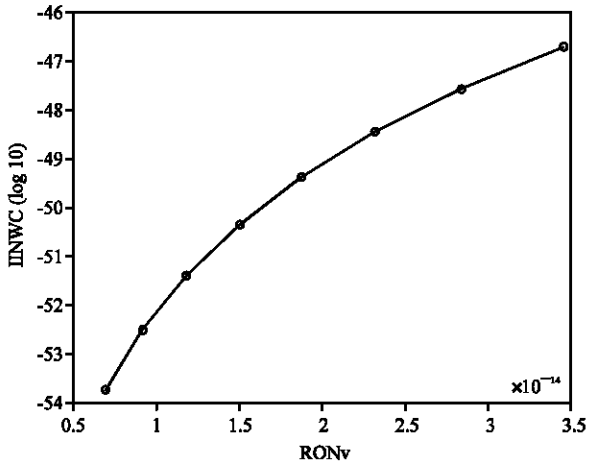

Fig. 6: Interferometric intensity noise versus relative output noise where FSR = 100

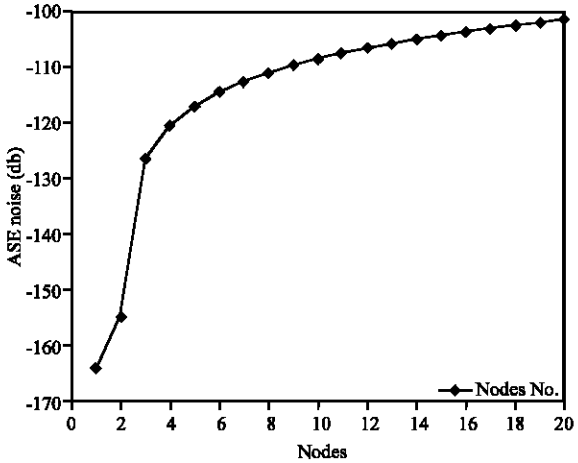

Fig. 9: The amplified spontaneous emission noise (ASE)-dB scale-versus number of nodes

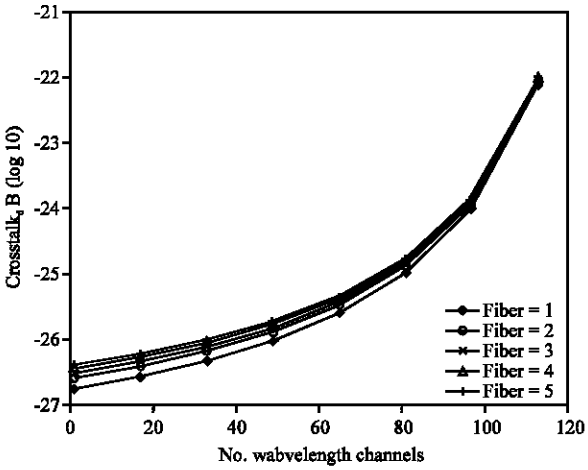

Fig. 7: Linear crosstalk versus number of nodes for various fiber numbers where FSR =30

The ASE versus number of nodes. The amplified spontaneous emission noise which is due to the use of the EDFA amplifiers that are used to count for the fiber attenuation through distance. With the many stages of amplifications, there is an accumulated noise that affects the bit error rate level and performance of the system.

A higher bit rate leads to a power penalty because it requires an increase in the receiver bandwidth. An increase in receiver bandwidth allows more noise, including the dominant ASE noise, to be coupled into the signal bandwidth, thereby increasing the distortion of the signal.

Figures were plotted with the number of OXCs traversed, N set at 20. So, it is possible for more noise to be induced for larger values of N since the noise is proportional to N. However, the number would have to be

very large to cause significant effect and most systems would not have that many OXCs in the network (Fig. 8, 9).

CONCLUSIONS

Performance analysis is carried out to investigate the effect of linear crosstalk in the presence of ASE noise, interferometric intensity noise losses from wavelength converter due to WDM on the performance of an optical multi-wavelength transport network employing wavelength converters based on XPM in an SMF and MZI. The results show an accumulation of noise from the ASE and the wavelength converter as a channel traverses through N OXCs resulting in higher receiver sensitivities as the nodes number increases. At the same time, the receiver sensitivity reduces for higher bit rates due to added noise coupled into the receiver bandwidth. The accumulated ASE noise is dominant at the receiver over other noise sources, while the crosstalk comes after ASE noise and the accumulated interferometric noise from the wavelength converter is relatively insignificant compared to the above two losses. The accumulated interferometric noise at the receiver depends on the Free Spectral Range (FSR) of the MZI used. With ASE noise sources removed, it produces significant noise with small values of FSR (<0.01 GHz). The crosstalk after the wavelength converter depends on fiber number, bit rate, channel number and node number. As a suggestion, it is necessary to go through the nonlinear effects and nonlinear crosstalk that will be created when increasing the launched power in the network and then to add them to this homodyne crosstalk to determine the complete picture about all the effects (and losses) and this eases the design process. More research may be conducted to detect the behavior of the wavelength converter based OXC for much higher bit rates than 20 Gbps, or wider range for FSR and what are the optimal distances-node numbers for the network, or the maximum number of channels that can be multiplexed. It also a reasonable suggested task to handle research about how to distinguish the small component of linear crosstalk that is included in the expression for interferometric intensity noise where the later expresses the additions of all the noise components due to device contacts, splitting and coupling beside a small part of the linear crosstalk in the wavelength converter.

REFERENCES

Agrawal, G.P. , 2002. Fiber Optic Communication System. John Wiley and Sons Inc.

Durhuus, T., B. Mikkelsen and K.E. Stubkjaer, 1992. Detailed dynamic model for semiconductor optical amplifiers and their crosstalk and intermodulation distortion. J. Lightwave Technol., 10: 1056-1065.

Durhuus, T., B. Mikkelsen, Joergensen, S.L. Danielsen and K.E. Stubkjaer, 1996. All-optical wavelength conversion by semiconductor optical amplifiers. J. Lightwave Technol., 14: 942-954.

Eilenberger, G., L. Dembeck, S. Bunse, W. Idler and K. Wuenstel, 1996. Cascadability of transparent WDM routing nodes using regenerating wavelength conversion components. Proceeding of ECOC'96, Oslo 1996, MoA 4.4, pp: 1.35-1.38.

Gyselings, T., G. Morthier and R. Baets, 1999. Crosstalk analysis of multiwavelength optical cross connect. J. Lightwave Technol., 17: 1273.

Iannone, E., R. Sabella, L. De Stefano and F. Valeri, 1996. All-optical wavelength conversion in optical multicarrier networks. IEEE Trans. Commun., 44: 716-724.

Karfaa, Y.M., F.M. Abbou, C.C. Hiew and H.T. Chuah, 2005. Performance analysis of multi-wavelength transport network employing OXC with wavelength converter based on XPM in SMF and MZI. J. Optical Commun. (Germany), 0173-4911: 17-23.

Keiser, G., 2000. Optical Fiber Communications. 3rd Edn., McGraw-Hill.

Ohlen, P. and E. Berglind, 1997. Noise accumulation and BER estimates in concatenated nonlinear optoelectronic repeaters. IEEE Photon. Technol. Lett., 9: 1011-1013.

Shen, Y., K. Lu and W. Gu, 1999. Coherent and incoherent crosstalk. In: WDM Optical Networks. J. Lightwave Technol., 17: 759-764.

Sim, N.T., S.P. Majumder and M.S. Islam, 2006. Bit error rate and crosstalk performance in optical cross connect with wavelength converter. Electrical and Computer Engineering, 2006. ICECE '06. Int. Conf., pp: 278-281.

Sim, N.T., S.P. Majumder and M.S. Islam, 2007. Bit error rate and crosstalk performance in optical cross connect without wavelength converter. Inform. Commun. Technol. ICICT '07. Int. Conf., pp: 217-222.

Simos, H., I. Stamataki and D. Syvridis, 2007. Relative intensity noise performance of wavelength converters based on four-wave mixing in semiconductor optical amplifiers. IEEE J. Q. Electron., 43: 370-377.

Steele, R.C., G.R. Walker and N.G. Walker, 1991. Sensitivity of optically preamplified receivers with optical filtering. IEEE Photonics Technol. Lett., 3.

Takahashi, H., K. Oda and H. Toba, 1996. Impact of crosstalk in an arrayed-waveguide multiplexer on N×N optical interconnection. J. Lightwave Technol., 14: 1097-1105.

Zhou, J., R. Cadeddu, E. Casaccia, C. Cavazzoni and M.J. O'Maliony, 1996. Crosstalk. Multiwavelength OXC networks. J. Lightwave Technol., 14: 1423-1435.