Journal of Applied Sciences

ISSN 1812-5654

science alert

ANSInet
an open access publisher
http://ansinet.com

Journal of Applied Sciences 11 (10): 1851-1856, 2011
ISSN 1812-5654 / DOI: 10.3923/jas.2011.1851.1856

Measurement of Near Wall Fluid Interaction with an Atomised Spray

[1]N. Lad, [2]A. Aroussi and [1]D. Adebayo
[1]Department of Thermal and fluid Engineering, University of Leicester,
University Road, Leicester, LE1 7RH
[2]Department of Mechanical Engineering, Universiti Teknologi PETRONAS,
Bandar Seri Iskandar, 31750 Tronoh, Perak, Malaysia

Abstract: The amount of research involving the effects of fluid interaction with solid boundaries has been provided by a large number of authors. However, these primarily involve single phase flow with uniform and controlled inlets. This study studies the techniques of non-intrusive optical measurement to visualise and measure the spanwise wake flow of various cylinders with modified surface geometry. This is to establish the ability of high magnification PIV and the effects of surface configurations on the near wake region within complex and multiphase flow. The measurement and visualisation is carried out using Particle Image Velocimetry (PIV). Through visualisation it was observed that smaller droplets are entrained into the recirculation region behind the cylinder while the larger droplets impact the cylinder surface, accumulate and drip off, and/or rebound off the surface and disperse into the free stream. The flow over the cylinder resulted in the formation of a wet layer within recessed geometry i.e., the grooves and riblets. PIV enables near wake flows to be visualised. Due to the limitations of 2D PIV seeded laden droplets travelling in/out of the plane are poorly represented. This is especially noticed when correlating images of helical type surface geometry. The use of high magnification PIV allows resolving smaller flow features within a complex flow regime. The measurements can fully identify and quantify flow within surface changes.

Key words: Atomised spray, interaction, circular cylinder, PIV

INTRODUCTION

It is widely known that research has been carried out by a number of authors describing fluid structure interaction. These all describe various numerical and experimental arrangements of cylinders (circular and others) within flows. However, these typically involve varying the prevailing Reynolds number of single phase fluids. The application of spray structure-interaction is common within industry i.e. oil misting within fast rotating machinery. Mist cooling within Heat exchanger fins.

Past research includes single isolated droplet impingement on flat surfaces (Chandra and Avedisian, 1991) and cylinders (Pasandideh-Fard *et al*., 2001), dripping liquid droplets off cylinders (Hung and Yao, 1999) and (Hung, 1998), spray impingement on unheated and heated flat surfaces in different boiling regimes (Gonzales and Black, 1997; Yao, 1994) and (Tropea and Roisman, 2000), droplet interactions with shear layers (Crowe *et al*., 1988), and droplet entrainment in free turbulent flows (without impingement) to determine the influence of the flow on droplet trajectories (Lazaro Lasheras, 1992).

MATERIALS AND METHODS

PIV is based upon spatial measurements, correlating between energy peaks within frames at a known Δt between them. Particle Image Velocimetry (PIV) is a diagnostic method that has been used extensively in fluid flow characterization, and has recently attracted attention for spray characterisation. The majority of spray PIV has been performed within combustion studies (Tsushima *et al*., 2000; Palero *et al*., 2000) within direct and diesel engines (Auriemma *et al*., 2003; Cao *et al*., 2000) and (Driscoll *et al*., 2003) and also within fire suppression studies which involve fluid dispersion over obstacles (Presser *et al*., 2006).

The setup is described in Fig. 1. The viewing area analysed is shown by the black square outline and the raw image samples in Fig. 1. The structure described in Fig. 1 is changed between each run. The structures under test are outlined in Table 1 and are described geometrically in Fig. 2. Velocity components of U and V are described in Fig. 1.

The experimental setup includes a non-swirling air that co-flows around the liquid injector. The experiment is

Corresponding Author: A. Aroussi, Department of Mechanical Engineering, Universiti Teknologi PETRONAS, Bandar Seri Iskandar, 31750 Tronoh, Perak, Malaysia

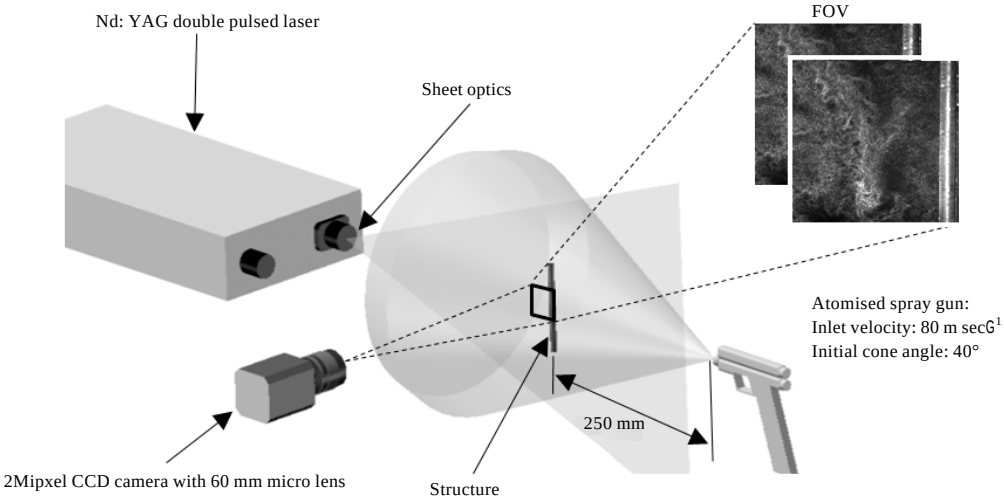

Fig. 1: Experimental setup of Spray system for analysis of wake properties by the cylinder cross section

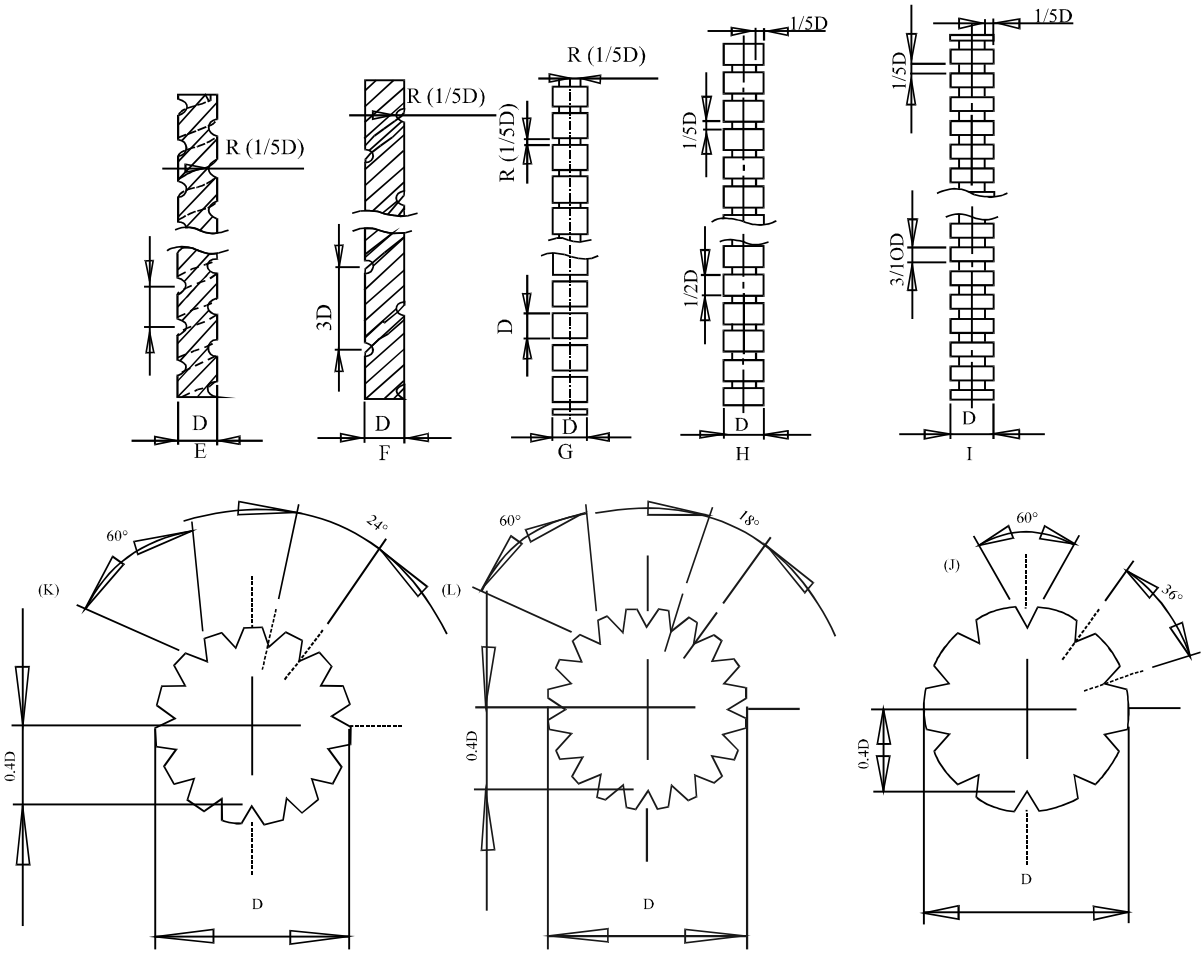

Fig. 2: Drawing of structure types. D = 10 mm and length = 150 mm. Designs H, J, K and L are cross sections with L = 150 mm

Table 1: Name and description of structure types

No.	Name/Description	No.	Name/Description
REF	10 mm circular cylinder	I	3 mm riblet at 3 mm spacing
E	Helical groove @ 10 mm pitch	J	Vertical grooves (10)
F	Helical groove @ 30 mm pitch	K	Vertical grooves (15)
G	3 mm riblet at 8 mm spacing	L	Vertical grooves (20)
H	3 mm riblet at 5 mm spacing		

oriented horizontally, as opposed to the original vertical arrangement, to prevent liquid droplets downstream of the obstacle from hitting a surface and falling back upstream into the oncoming stream. The agent used in this study was water that was supplied to the flow field with a 40° Solid-cone pressure-jet atomizer with an air pressure 410-450kPa and a specified flow rate of 0.0045 kg^{-1} s. For these experiments, the incoming air (supplied from a 7l/min compressor) was directly connected to the spray gun via a regulator valve. A Nd:YAG Double pulsed laser was utilised to produce a sheet of laser energy. A 2Mpixel CCD camera with a 60mm micro lens was used to focus upon the particles of seeder highlighted by the laser sheet. The seeder utilised is Sphericel 50 μm (Hollow Glass Spheres).

The laser control, laser/camera's synchronisation and data acquisition and processing was handled by a hardware module and Dynamic Studio v1.45 softwares installed on a standard PC. The time interval between two laser pulses was equal to 15 μsec which allowed approximately one to two diameters of seeding particle movement between frames. The trigger rate of the camera was set to 4 Hz (4 images per second) and approximately 150 images were captured in each run. The image area was located 250mm downstream of the nozzle exit allowing a field of view of 40 mm×40 mm. Recorded images were correlated using a 16×16 pixel interrogation area with 50% overlapping. Velocity patterns from PIV measurements are carried out through successive time stamps. However, since the trigger rate of the camera was limited to 4Hz it was too slow to pickup smooth transitions between image pairs for accurate time dependant analysis. Therefore all PIV within this study are time averaged solutions.

RESULTS AND DISCUSSION

The seed is entrained in the turbulent flow field and relatively high concentrations of particles are found in the wake behind the cylinder, this is evident by the raw images in previous works carried out by the author. However, the droplets at the centre of the flow are found to impact on the surface of the cylinder while those further from the central position flow around or past the cylinder with an increased velocity. Droplets that impinge and wet the cylinder surface drip off at a rate of approximately one drop every 3 seconds. Some seeding particles were found to adhere to parts of the cylinder, the majority being at the trailing edge which increases energy scatter on the surface of the structure. This was controlled by applying non reflective paint on the structure surface. The flow over the cylinder resulted in the formation of a wet layer within recessed geometry i.e. the grooves and riblets. Through visualisation no evidence of secondary breakup of the droplets was observed droplet breakup; this was expected due to the low Weber number within the flow.

Figure 3 clearly depicts the velocity components (Magnitude, U and V). It is clear that the smaller field of view allows a smaller velocity gradient within the image allowing more accurate spatial measurement. A lower velocity gradient allows greater control over particle displacement between image frames, thus allowing a finer correlation and thus interrogation area to be defined. By zooming into smaller areas within the trailing edge of the structure surface geometry such horizontal and helical grooves can be clearly defined and flow within them can be quantified. All grooved flows show an increase in U-velocity within each groove suggesting that the effect of this surface geometry acts as channel flow. Within Fig. 3 it is possible to notice the reduction of U-velocity at the wall with all horizontally and helically grooved shapes (structures E-I). The grooves (structures J-L) allow fluid to flow within them reducing the pressure difference between front and trailing edge.

The modification to the surface geometry also allows greater control over the downstream near wall region. Comparing the plots of velocity magnitude it is clear that the wake measured within the (REF) (circular cylinder) image is uneven. This is primarily due to sinusoidal vortices along the length. The high magnification only captures part of the vortices. The stream lines for the (REF) structure highlight this fact. The helical grooves of structures (E) and (F) produce similar streamline solutions. This is due to the helical direction. Working in a similar function to the horizontal grooves the flow is channelled through However, due to the pitch direction it is forced in an upward direction. This phenomenon is reduced with structure (F) as the pitch length is increased and therefore the amount of grooves within the image has been reduced. Structures (G) to (L) show a more symmetrical set of stream lines, which suggest a reduction in the gradient of V-velocity within the image, this is evident by (G, L) and (J).

Due to the complexity of spray flows, the wake area is very chaotic. The use of 150 image pairs provides well averaged results. However, since the technique used

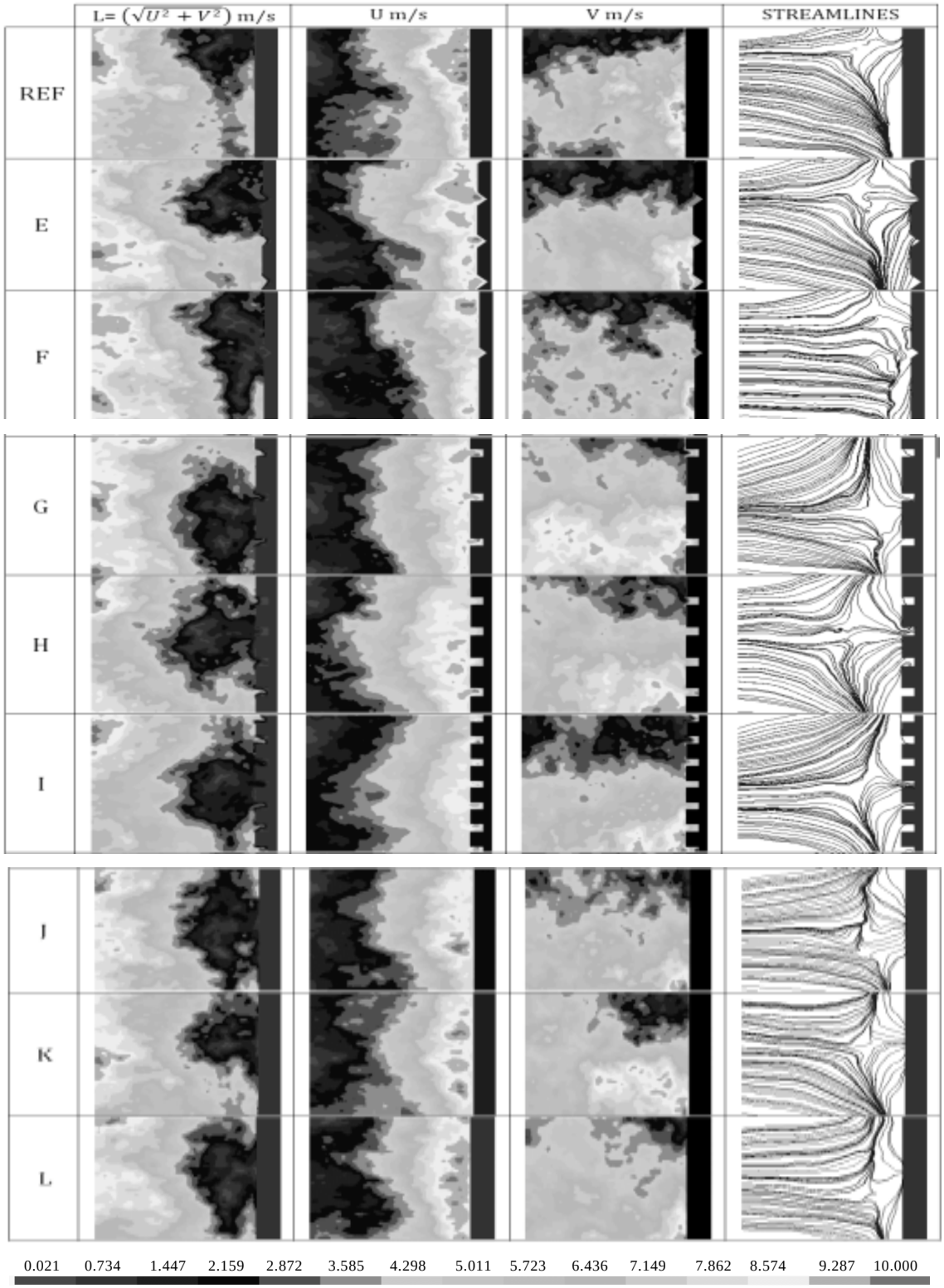

Fig. 3: High magnification of PIV plots at L/2. FOV is 30 mm×30 mm, describing near wall characteristics

within this study is only provides 2D PIV data, the Z-plane particle displacement cannot be solved for. Therefore understanding the true characteristics of complex wake flows at the wall cannot be identified. The small Field of view (FOV) makes it hard to understand the full nature of the flow field. It is possible in future research to stitch high magnification images together to provide a detailed description of a broader flow field. This technique makes it easier to choose an optimum pulse duration between images in PIV since the velocity gradient will remain small.

By magnifying PIV images at smaller flow features very slow recirculation at the near wall, and primarily the grooves, can be resolved. Small recirculation areas exist within each of the individual riblets of probes (G, H) and (I) have also been observed. By analysing the stream lines, the flow does not protrude from all of the grooves; this is due to the fact that some of the flow from the grooves travel through the Z Plane. Through the correlation process of PIV this then leads to lower velocities within the plane. 3D- PIV can take advantage of this producing more accurate depictions of the spanwise wake flow.

CONCLUSIONS

The focus of this study is to describe the effectiveness of high magnification PIV for spanwise fluid structure interaction within spray flow. The idea is to determine spray around various structure types to describe changes in flow features. The use of PIV is a quantifiable tool which enables whole flow velocity mapping. By magnifying the FOV it is able to reduce the velocity gradient within an image making the spatial measurement more accurate. It has been observed within this study that by changing the surface geometry by millimetres, the wake flow field within a chaotic multiphase system produces different characteristics. It is noted that the position of the FOV can have an effect on the flow field; However, this has been controlled by taking 150pairs of images over 75seconds of spraying. These images are then averaged to portray time independent results. The flow features for each geometry variant have been fully resolved describing different characteristics for each. It is evident that even small helical grooving within a circular cylinder can channel the flow within the direction of the thread this effect if quickly dissipated. Effects like these are not fully resolved when producing PIV upon the entire probe length. The size of the FOV can also allow the features within each horizontal groove to be identified, describing recirculation. The use of high magnification PIV allows details within the flow to be resolved more effectively. The flows through grooves and near wall flows can be easily identified. The technique allows a better understanding of localised flow systems within complex flow regimes.

REFERENCES

Auriemma, M., G. Caputo, G. Valentino and J. Zarinchang, 2003. Fluid dynamics investigation of fuel spray for SIDI engines by particle image velocimetry. Proceeding of the 9th International Conference on Liquid Atomization and Spray Systems, July 13-18, Sorrento, Italy, pp: 34-34.

Cao, Z.M., K. Nishino, S. Mizuno and K. Torii, 2000. Spray structure and associated droplet velocity in the initial stage of diesel fuel injection. JSME Int. J. Ser. B, 43: 582-589.

Chandra, S. and C.T. Avedisian, 1991. On the collision of a droplet with a solid surface. Proc. Math. Phys. Sci., 432: 13-41.

Crowe, C.T., J.N. Chung and T.R. Troutt, 1988. Particle mixing in free shear flows. Prog. Energy Combust Sci., 14: 171-194.

Driscoll, K.D., V. Sick and C. Gray, 2003. A dual-PIV approach to two-phase flow measurements in fuel sprays. Exp. Fluids, 35: 112-115.

Gonzales, J.E. and W.Z. Black, 1997. Study of droplet sprays prior to impact on a heated horizontal surface. J. Heat Transfer, 119: 279-287.

Hung, L.S., 1998. Investigations of the transport and dynamics of droplets impacting on complex objects. Ph.D. Thesis, Department of Mechanical Engineering, Carnegie Mellon University, Pittsburgh, PA.

Hung, L.S. and S.C. Yao, 1999. Experimental investigation of the impaction of water droplets on cylindrical objects. Int. J. Multiphase Flow, 25: 1545-1559.

Lazaro, B.J. and J.C. Lasheras, 1992. Particle entrainment and turbulent mixing in free, shear-flows: part 1. The naturally developing mixing layer. J. Fluid Mech, 235 (1992), pp. 143-178.

Palero, V., K. Sato, Y. Ikeda, T. Nakajima and J. Shakal, 2000. Stereoscopic particle image velocimetry evaluation in a spray. Proceeding of the 8th International Conference on Liquid Atomization and Spray Systems, July 2000, Pasadena, CA, pp: 893-900.

Pasandideh-Fard, M., M.Bussmann, S.Chandra and J. Mostaghimi, 2001. Simulating droplet impact on a substrate of arbitrary shape. Atomization Sprays, 11: 397-414.

Presser, C., G. Papadopoulos and J.F. Widmann, 2006. PIV measurements of water mist transport in a homogeneous turbulent flow past an obstacle. Fire Safety J., 41: 580-604.

Tropea, C. and I.V. Roisman, 2000. Modeling of spray impact on solid surfaces. Atomization Sprays, 10: 387-408.

Tsushima, S., M. Negoro, H. Saitoh, M. Fuchihata, F. Akamatsu and M. Katsuki, 2000. Measurement of instantaneous 2-D velocity field and local chemiluminescence in a premixed-spray flame by PIV and MICRO system. Proceedings of the 10th International Symposium on the Application of Laser Techniques to Fluid Mechanics, July 2000, Lisbon, Portugal, pp: 1-12.

Yao, S.C., 1994. Dynamics and Heat Transfer on Impacting Sprays. In: Annual Review of Heat Transfer, Tien, C.L. (Ed.). Vol. 5. Chapt. 8. CRC Press, Boca Raton, FL.