Journal of Applied Sciences

ISSN 1812-5654

science alert

ANSInet
an open access publisher
http://ansinet.com

Journal of Applied Sciences 13 (22): 5215-5219, 2013
ISSN 1812-5654 / DOI: 10.3923/jas.2013.5215.5219

Application of an Integrated Heat Recovery Technology for Domestic Hot Water Supply System and Air Conditioning

[1,2]Chen Yan and [1]Zhang Yufeng
[1]School of Environment Science and Technology, Tianjin University, Tianjin, 300072, China
[2]School of Mechanical Engineering, Beijing Institute of Technology, Zhuhai, 519088, China

Abstract: This study is to design an integrated heat recovery and air conditioner system and to investigate the feasibility and the potential performance of this system in changing conditions. Different season conditions and operating modes are studied based on the items of one hotel. In winter, heat recovered from wastewater is used on water heating and air condition and the surplus energy of air conditioner system is used on hot water system in summer. Dynamic energy simulation was performed with a comprehensive Domestic Hot Water (DHW) heating and air conditioning system composed of some components like High Temperature Heat Pump (HTHP) unit, water tanks, heat exchangers and pumps.

Key words: High temperature heat pump, wastewater heat recovery, domestic hot water, air conditioning, energy simulation

INTRODUCTION

There is a great deal of useful waste energy, which can be used for other purposes, is directly dissipated to the environment. This dissipated heat not only wastes energy, but also causes severe pollution in the surrounding areas. For instance, plentiful waste condensing heat from traditional air conditioning system is directly exhausted to the environment, especially in summer-time. Numerous spring hotels consumed large amount of geothermal water and discharge more warm wastewater to the environment without being properly reclaimed. In addition, there were several wastewater sources for heat recovering system, such as wastewater discharged from some industries, residential grew water and urban sewage (Ni *et al.*, 2012; Zhang *et al.*, 2007; Baek *et al.,* 2005; Liu *et al.,* 2010). The current concerns about the environment and global climate change are leading to increasingly stringent requirements about waste energy discharge as well as energy utilization efficiencies. This background serves as a favorable setting for the investigation of the feasibility of waste energy recovery through heat pumps system in a beneficial manner for a big spring hotel. Spring hotel projects in China and worldwide increase steeply in these years.

The most important apparatus to recove waste heat is heat pump and improving performance of heat pump extends application range of the exhaust heat resources. Tianjin University has developed a new refrigerant BY-3, which make High Temperature Heat Pump (HTHP) supply 65-95 centigrade hot water by using 20-55 centigrade low grade waste heat resources at a high efficiency. By changing the model cooling water system of air conditioning unit, the waste condensing heat is recovered to heat tap water in summer and wastewater heat is applied to heat water and space heating.

Given the current problems of determinating the appropriate the equipment capacity and choosing a beneficial heat exchanging cycle for this integrated heat recovery and air conditioner system, it became necessary to develop a simulation system with wastewater tank, exchanger, HTHP unit, heat pump and hot water storage tank through a real item built in a spa center. This is followed by programming to test the operating performance and potential savings of the integrated system in changing conditions. It gives some suggestions to designers and deciders.

BASIC PRINCIPLE

The hotels with spas usually have two hot water supply and drainage system. One system supplies spring water mined from the well for balneology. The other system supplies tap water for DHW. The proposed heat recovery and comprehensive utilization system would reclaim heat energy from traditional spring water use system and cooling water from air conditioning system. The water in the wastewater storage tank serves as a low-temperature heat source of HTHP. And then HTHP

Corresponding Author: Chen Yan, School of Environment Science and Technology, Tianjin University, Tianjin, 300072, China

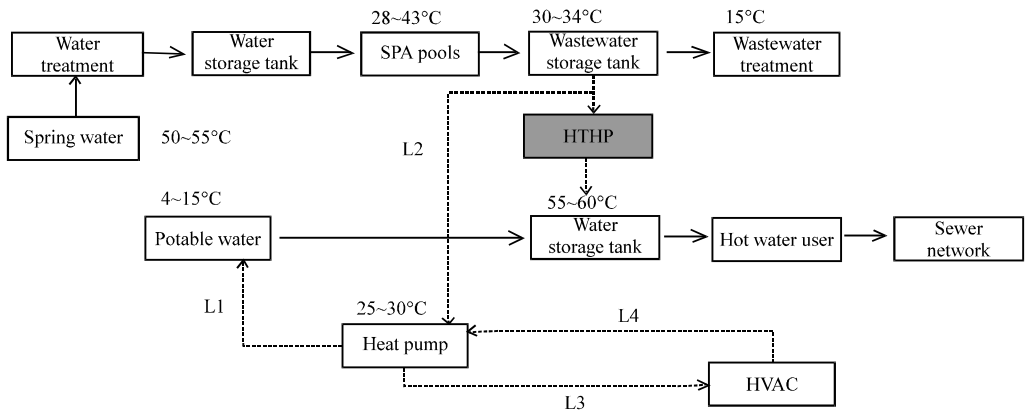

Fig. 1: Schematic of energy recovery and comprehensive utilization system with HTHP for a traditional spring water and DHW supply and drainage process, L1 and L4 are for summer period, L2 and L3 are for winter period

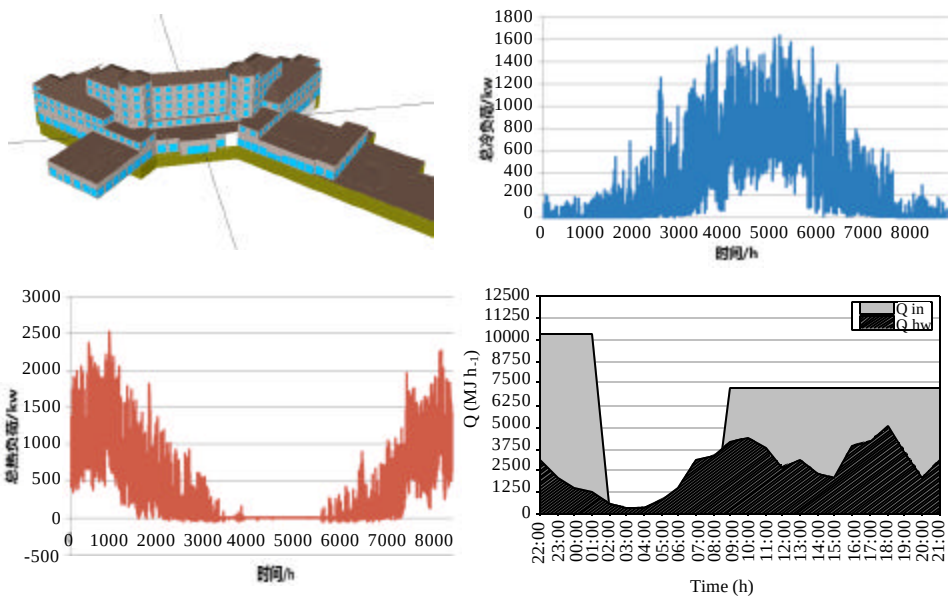

Fig. 2: Simulation of cooling load and heating load in whole year and hourly heat load flow of wastewater and DHW in a full load day, Qin is the heat load of wastewater flow in the wastewater storage tank, Qhw is the heat load of domestic hot water per hour

supply energy to water heating system. Solid arrows show the route of water, but dotted arrows show the route of energy showed in Fig. 1 Compared with the traditional processes, this process adds to HTHP equipment and omits the gas boiler and cooling tower.

SYSTEM DESIGN

The hotel "T" is a large spring hotel in Tianjin of China, with a total area of 40,000 m^2, 6 floor, the cooling load and heating load is simulated by eQuest3.64, showed in Fig. 2. Wastewater discharged from spas and baths is relatively adequate in quantity (about1000~3000 t d^{-1}), higher temperature (about 293~303 K) and better quality compared with urban sewage as an efficient heat source for HTHP system.

DHW heating load and Wastewater amount: The flow rate of wastewater depends on hotel spring pools size and operation conditions. The heat loss of water in pools can be calculated through the evaporation heat loss, which is account for 80% total heat loss empirically:

$$Q_x = c(0.0174v_f + 0.0229)(P_b - P_q)A\left(\frac{760}{B}\right) \quad (1)$$

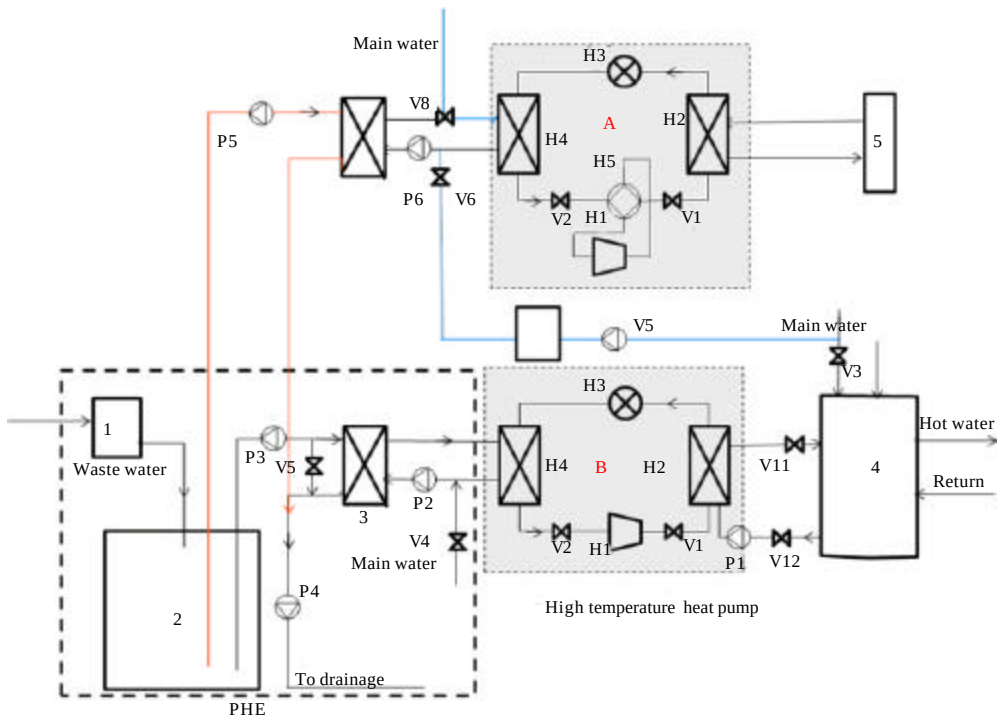

Fig. 3: Principal design of energy-recovery system from wastewater. Labels:H1 compressor; H2 condenser; H3 expansion valve; H4 evaporator; 4 hot water storage tank, 2 wastewater tank; 1 filter; 3 plate heat exchanger, 5 diversity water device, 6 water tank. And there are some pumps: P1, P2 and P6 are circulating pumps ; P3and P5 are supply pumps; P4 is drainage pump. V1-V12 values

where, Q_x denotes evaporation heat loss of water surface of pools (kJ h^{-1}), c is vaporization heat for water evaporation. v_f is wind speed on the surface of pools. P_b and P_q are steam partial pressure (mmHg) of saturated air having the same temperature with the water in the pools and environment air around the pools, respectively. A is the area of pools surface and B is atmospheric pressure locally.

The flow rate of hourly daytime drainage is shown as:

$$Lw = \frac{1.2Q_x}{C(T_{in} - T_{out})} \quad (2)$$

where, L_w is the flow rate of hourly daytime drainage (m^3 h^{-1}); C is specific heat (kJ/kgK); T_{in} is the temperature of complement water, 57 centigrade in this project, T_{out} is mean temperature of water in pools 38 centigrade.

Design of heat recovery and comprehensive utilization system: This system is composed of four parts: wastewater heat extraction system, HTHP, hot water heat supply system and heat pump A air conditioning system showed in Fig. 3. Wastewater in the tank is pumped into the plate heat exchanger. After giving off heat to the circulating water, the wastewater at a lower temperature leaves the exchanger and is drawn off by drainage Pump 4. City water flowed into storage tank, while the water is cycled by pump and heated in condenser continuously. There are two modes: red lines for winter condition and blue lines for summer condition.

ENERGY ANALYSIS MODEL

The main focus in this study is energy flow from wastewater tank to HTHP and heat pump air conditioner system. The calculations are done using steady state conditions. An instantaneous view of one day in winter or summer process is not meat for estimations of annual energy demand. The aim of energy flow figure is to produce a "transparent" view, easy to understand for designers and deciders. Figure 4 shows the flowchart of energy consumption in this energy recovery system of wastewater.

Temperature models of hot water storage tank: Using the conservation of mass and energy, the temperature of water in hot water storage tank can be determined by this Eq.:

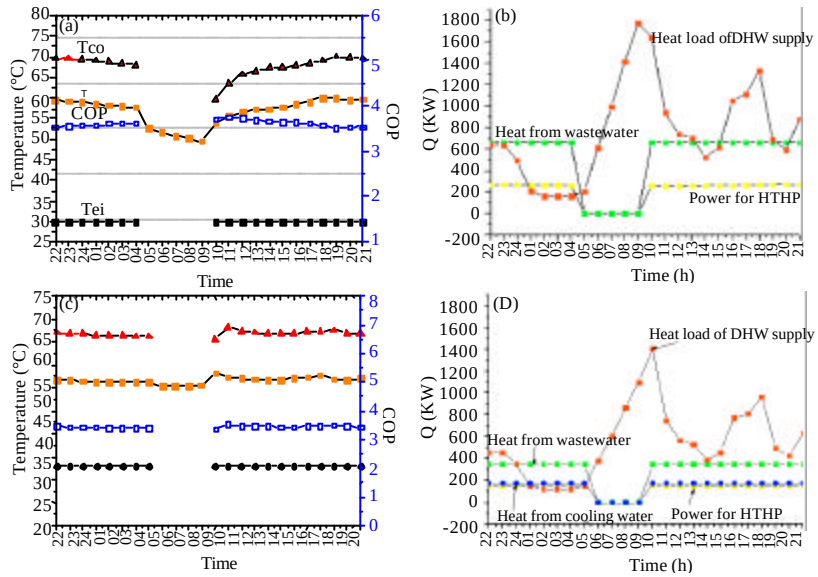

Fig. 4 (a-d): COP, operating temperature of system and energy flow: A and B in winter condition, C and D in summer condition

$$V = V_0 + L_{cold} - (L_s - L_r) \quad (3)$$

$$cpL_{cold}(T - T_{cold}) + cpV_0(T - T_0) + Q_1 + Q_2 = Q_{hp} + Q_3 \quad (4)$$

L_{cold} and T_{cold} are the flow rate and the temperature of tap water flow into the tank. T_{cold} affected by environment. It does not vary greatly in a day. V_0 and V are the hourly start volume and final volume of water in the tank (m^3), respectively. T_0 and T are the hourly start temperature and final temperature of water in the tank (centigrade), respectively. L_s is the flow rate of DHW to supply ($m^3\ h^{-1}$). L_r is the flow rate of water back from network ($m^3\ h^{-1}$). Q_1 and Q_2 denote the heat loss from network and tank (kJ), Q_{hp} and Q_3 are the heat afforded by heat pump and auxiliary boiler (kJ). c and ñ are the specific heat water (kJ kg^{-1} K) and density of water (kg m^{-3}), respectively.

Heat pump models: According to the experimental data supplied by the manufacturers, the COP simulated equation is represented in this equation.

Summer condition:

$$COP = -0.012*EXP(-0.00498*Teo+0.17644*Tci)+1.79254*Teo/Tci+4.99642 \quad (5)$$

Winter condition:

$$COP = -0.0004*EXP(-0.03579*Tei+0.13454*Tco)+4.90531*Tei/Tco+3.06314 \quad (6)$$

where Tei and Teo are the temperature of water into and out from evaporator and Tco and Tci are the temperature of water out from and into condenser. $R^2 = 0.9887$ and 0. 994.

HTHP models: The Coefficient Of Performance (COP) varies with the temperature of the wastewater into evaporating and the temperature of the DHW out from condenser. According to the experimental data supplied by the manufacturers, the COP simulated equation is represented in this Eq. 15:

$$COP = 5.3609477+0.1125383Tco-0.0046644Tco^2-0.2886778Tei-0.0125538Tei^2+0.015759Tco*Tei \quad (7)$$

where Tei is the temperature of water into evaporator and Tco is the temperature of water out from condenser. $R^2 = 0.996$.The deviation between experimental results and theoretical calculation from the model is within 5%.

RESULTS AND DISCUSSION

An integrated heat recovery and air conditioner system using High Temperature Heat Pump (HTHP) has been developed for DHW heating of the hotel in order to reduce the energy consumption of hotel and protect environment. This system connected two traditional processes (wastewater drainage process and DHW supply process) with HTHP equipment. In addition, the temperature of wastewater is reduced 15 centigrade by HTHP system, which is helpful for water treatment

Table 1: Energy consumption of HTHP system

Item	Energy consumption
Total heat load of DHW (KW)	1120
HTHP input power (KW)	308
Circulating pumps input power (KW)	24.6
Heat loss of insulated pipelines (KW)	19
Count of wastewater used by energy recovery (t)	693

Table 2: Cost comparison with traditional heating system

Items	HTHP system	Traditional system
Initial investment (USD)	88,330	64,240
Energy source	Electricity: 1343981 KWh	Gas: 457000 m^3
Price of energy	0.085/KWh	0.37 m^{-3}
Operating cost (USD/year)	113,152	169,056

system. Based on the simulation, we analyzed the feasibility and the potential performance of heat recovery and utilization system in changing conditions and different operating strategy:

- The HPHP system could satisfy 100% of the DHW heat load of hotel with enough wastewater heat and the temperature of hot water in storage tank is 50~60 centigrade. The COP of HTHP system is 3.4~3.8, when the temperature of water out of condenser is 60~70 centigrade in Fig. 4
- The changing of operation conditions impacts the performance of heat pump. The heat exchanging method I could maintain HTHP system more stable and efficient
- Optimum design of HTHP installed capacity and operating strategy could reduce the cost of HTHP system greatly. Compared with traditional system, HTHP system has greater economic advantages
- According to calculations, the wastewater heat recovery and utilization system need wastewater mount 2.31 times hot water demand
- The energy consumption of the wastewater heat recovery and utilization system including HTHP units, circulating pumps and heat loss of insulated pipelines is listed in Table 1. We chose plan B as the best-case analysis. The design heat load of Plan B is 1120 KW. The COP is 3.64. The heat loss of insulated pipelines is 1.7% of the total heat load of DHW. The energy consumption of circulating pumps is 2.2% of the total heat load of DHW. The ratio of wastewater demand-DHW supply is 2.31
- The cost comparison of water heating systems is listed in Table 2. Gas-fired boiler is one of the most widely used types. The installed capacity of gas-fired boiler for this project is 1.4KW. The initial investment of HTHP system is 1.375 times that of gas-fired boiler system. But the operating cost of gas-fired boiler system is 1.5 times that of HTHP system

The wastewater heat recovery and utilization system using high temperature heat pump is very suitable for the hotel with sauna.

REFERENCES

Baek, N.C., U.C. Shin and J.H. Yoon, 2005. A study on the design and analysis of a heat pump heating system using wastewater as a heat source. Solar Energy, 78: 427-440.

Liu, L., L. Fu and Y. Jiang, 2010. Application of an exhaust heat recovery system for domestic hot water. Energy, 35: 1476-1481.

Ni, L., S.K. Lau, H. Li, T. Zhang, J.S. Stansbury, J. Shi and J. Neal, 2012. Feasibility study of a localized residential grey water energy-recovery system. Applied Thermal Eng., 39: 53-62.

Zhang, J., X.S. Cao and X.Z. Meng, 2007. Sustainable urban sewerage system and its application in China. Resour. Conserv. Recycl., 51: 284-293.