# Journal of Applied Sciences

ISSN 1812-5654

science alert

ANSInet
an open access publisher
http://ansinet.com

Journal of Applied Sciences 14 (3): 285-290, 2014
ISSN 1812-5654 / DOI: 10.3923/jas.2014.285.290


# Techno-economic Evaluation on Enhancing Cogeneration Plant Capacity: Case Study of Palm Oil Mill Cogeneration Plant

[1]Mohd Amin Abd Majid, [2]Zulkipli Ghazali and [3]Nazri Talib Shin Min
[1]Department of Mechanical Engineering,
[2]Department of Management and Humanities,
[3]Department of Chemical Engineering, Universiti Teknologi PETRONAS,
Bandar Seri Iskandar, 31750, Tronoh, Perak, Malaysia

**Abstract:** The aim of the study is to apply techno-economic evaluation for selecting a feasible alternative to enhance a co-generation power generation capacity of a palm oil mill. The co-generation plant is using Empty Fruit Bunch (EFB) as fuel. The basis of the technical evaluation is to compare three alternatives on increasing the co-generation power generation capacity. Alternative 1 is to consider installing a new high capacity boiler to the current cogeneration system and maintaining the current turbine. Alternative 2 is to install a new high efficiency back pressure steam turbine and maintain the current boiler. While Alternative 3, is to install high capacity an extraction steam turbine and maintain the current boiler. Present worth analysis is used for economic evaluation. Both the capital and operational expenditures are taken into account in assessing the present worth of the alternatives. Results from the technical and economic analysis have identified Alternative 2 as the most feasible alternative. Since substantial quantity EFB are available in Malaysia and being used as fuel for power generation at the palm oil mills, the approach could be useful for enhancement of co-generation capacity of the mills.

**Key words:** Techno-economic, cogeneration, steam turbine, palm oil mill

## INTRODUCTION

Palm oil residues, shell, fiber and Empty Fruit Bunch (EFB), have been used to generate electricity (Husain *et al*., 2003; Sumathi *et al*., 2008; Bazmi *et al*., 2011; Shafie *et al*., 2011, 2012; Begum and Saad, 2013). The residues are used as fuel to the boilers. The steam from the boiler is used to run back pressure steam turbine to generate electricity for plant use. As of 2009, the amount of electricity generated by using shell, fiber and EFB are 5792.13, 1578.19 and 46, 346.15 GW h, respectively (Kalinci *et al*., 2011; Shafie *et al*., 2012).

It is reported that the turbines and boilers have low thermal efficiencies at most of the cogeneration plant at the palm oil mills (Husain *et al*., 2003). Since, the palm oil residues have the highest potential of generating electricity from among the biomass components in Malaysia (Shafie *et al*., 2012), it is important to enhance the electricity generating capacity of the palm oil mills. One approach is through equipment refurbishment or upgrading of the cogenerating plants of the palm oil mills. In order to achieve optimum returns on the refurbishment or upgrading exercise, the scope of evaluation should cover both the technical as well as economic. This case study explores the use of both of these approaches to evaluate the feasibility of increasing the power generating capacity of a cogeneration plant for the palm oil mill.

## PROBLEM STATEMENT

The case study is a palm oil mill located in Kalimantan, Indonesia. It operates a cogeneration system using biomass residue as fuel to operate the boiler. The boiler produces high pressure and temperature steam that expands in a backpressure steam turbine and produces electric power for the internal needs of the mill. The exhaust steam from the turbine goes to an accumulator (LP steam main) that distributes the steam to various processes in the mill. The configuration of the cogeneration plant is as shown in Fig. 1.

The mill is integrated with Kernel Crushing plant and Composting plant. This arrangement differs from the normal palm oil mill set-up. The integration is necessary in order to accommodate the needs of fertilizer for field

**Corresponding Author:** Mohd Amin Abd Majid, Department of Mechanical Engineering, Universiti Teknologi PETRONAS, Bandar Seri Iskandar, 31750, Tronoh, Perak, Malaysia

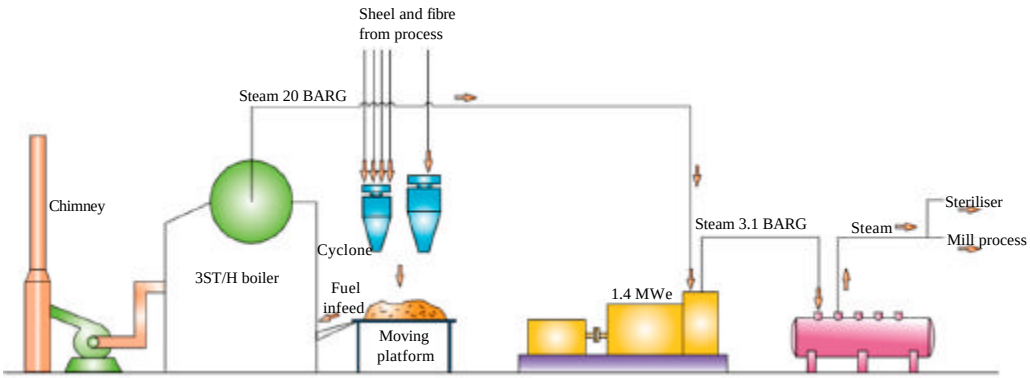


Fig. 1: Cogeneration plant of the palm oil mill showing the main equipment and the steam distribution system

Table 1: Alternatives that have been identified to increase the capacity of the cogeneration plant

| Alternative | Description |
|---|---|
| 1 | Installation of 45,000 kg $h^{-1}$ water tube boiler |
| 2 | Installation of high efficient back pressure steam turbine 1300 kWe at 23 kg $kWh^{-1}$ steam rate |
| 3 | Installation of high capacity extraction turbine |

usage to restructure the soil and overcoming the limitation of transportation in dispatching palm kernel. With these additional integrated plants, the total kW load of the plant has increased from the current about 1000-1300 kW. The existing cogeneration system used in the mill is insufficient to meet the need of the additional plants.

The main equipment of the cogeneration plant consists of a boiler with design capacity of 35 ton $h^{-1}$ and one unit of back pressure steam turbine with rated capacity of 1398 kW. The boiler supplies steam to turbine through HP Steam Main at 20 barg saturated steam and 30 ton $h^{-1}$ steam flow rate. The back pressure steam turbine running on part load consumed at about 30 ton $h^{-1}$ steam exhausted to LP Steam Main at 3.1 barg. The let-down also was installed and equipped with pressure sensor integrated with process stream to fulfill the process demand whenever turbine operating on part load and fluctuation on process steam consumption. The maximum power that can be generated by the turbine is 1030 kW at 32,000 kg $h^{-1}$ dry saturated steam. Higher capacity boiler is required in order to generate 1300 kW using the existing steam turbine. To address this problem three alternatives as listed in Table 1 have been identified.

## MATERIALS AND METHODS

The objective of this study is to determine the best selection from the three alternatives as shown in Table 1. Method that was used is divided into two phases.

**Phase one:** Evaluated the feasible alternative based on Process Design technique. The calculation of steam and power balance to determine the best matching of utility and process heat demand for sufficient power generation to the entire plant.

**Phase two:** Evaluated the feasible alternatives from the Phase one for the selection of the 'mutually exclusive' Project. The selection was based on engineering economic methods namely Present Worth (PW), External Rate of Return (ERR) and sensitivity analysis.

**Phase one: Process design analysis:** The process design is focusing on steam availability and proper turbine matching in order to generate maximum power from the existing plant. Maximum power generation up to 1300 kWe will eliminate the power import from diesel generator set.

Based on the existing cogeneration plant configuration, the proposal was planned for three feasible alternatives as below:

- **Alternative 1:** The system configuration is as shown in Fig. 2. The system will guarantee the power demand of the entire plant will be from the existing steam turbine without need to import power from generator set. However, few changes in steam balance have to be evaluated are as follows:
    - Purchase of new boiler with capacity of 40,500 kg $h^{-1}$ capacity. This will require high capital cost
    - Use of bigger boiler to generate higher steam will need more fuel. It will be no surplus fuel
    - The letdown of 200 kg $h^{-1}$ of steam from HP steam main to LP steam main
    - The increasing in steam to be venting out to the atmosphere at 12,150 kg $h^{-1}$

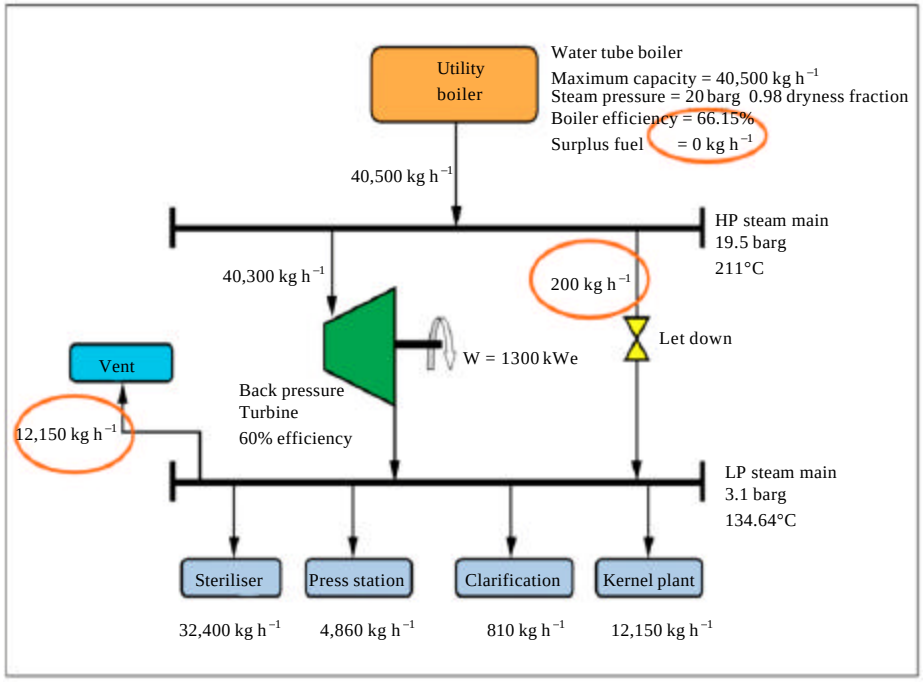


Fig. 2: Alternative 1-40,500 kg $h^{-1}$ new boiler is to be installed, however the steam turbine is maintained, 200 kg $h^{-1}$ hour high pressure steam is letdown to low pressure steam main. The excess steam is venting out to atmosphere at 12,150 kg $h^{-1}$

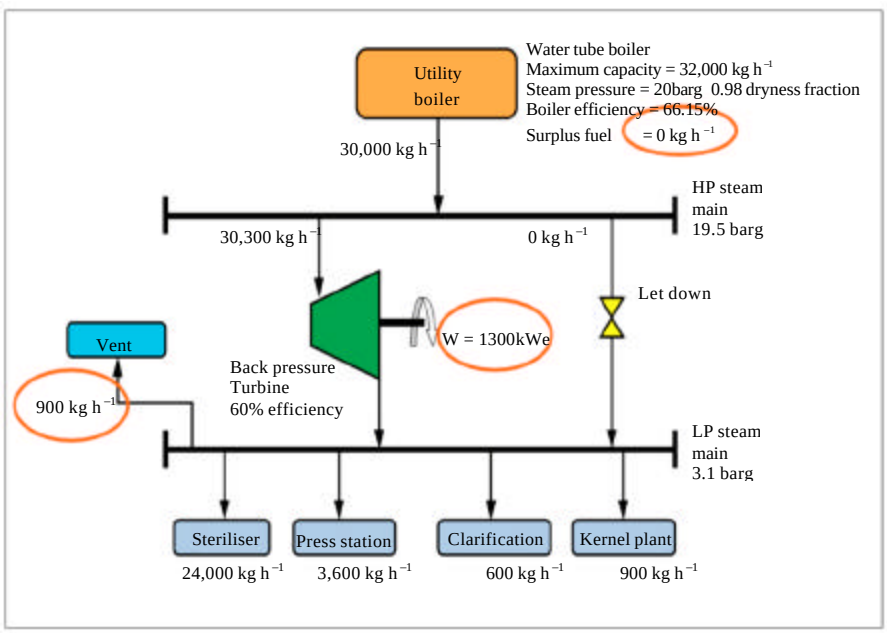


Fig. 3: Alternative 2-A new back pressure turbine is to be installed while the existing boiler is maintained. No letdown steam from high pressure steam to low pressure steam main, Only 900 kg $h^{-1}$ steam is to be vetting out to atmosphere

- **Alternative 2:** Configuration is as shown in Fig. 3. The configuration will fulfill the power demand of the entire plant and will eliminate the import power from generator set. The changes in steam balance that has to be evaluated are as follows:

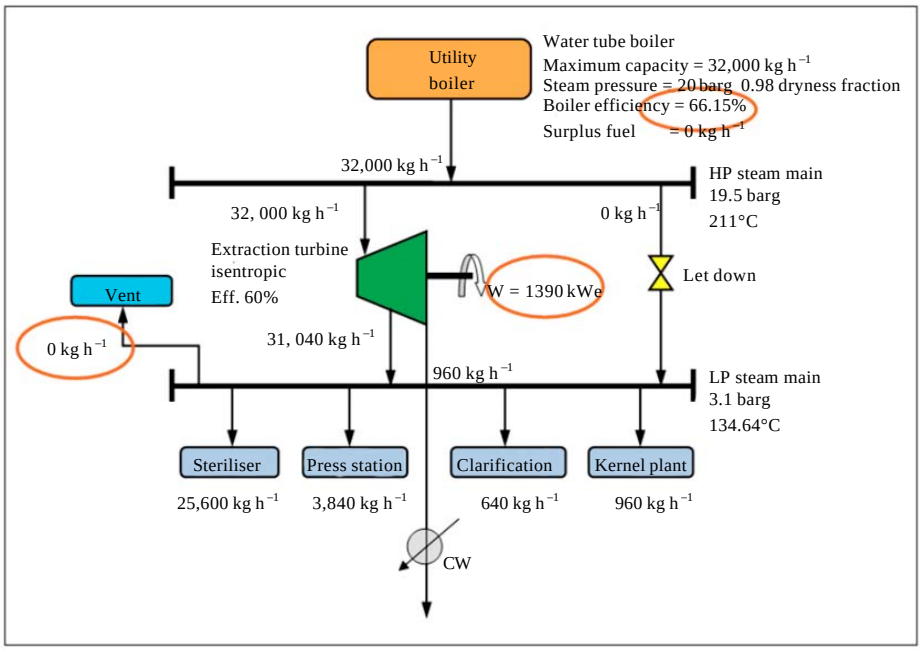


Fig. 4: Alternative 3-new extraction turbine is installed, however the existing boiler is maintained. No letdown of steam from high pressure steam main to low pressure steam main. No steam need to be venting out to the atmosphere

- Purchase of new high efficiency back pressure turbine will require lower capital cost than Alternative 1
- Use of existing boiler to generate steam at only 30,000 kg $h^{-1}$ will need lower milling throughput. It will be no surplus fuel
- No letdown of steam from HP steam main to LP steam main
- The steam need to be venting out to the atmosphere at only 900 kg $h^{-1}$

- **Alternative 3:** It will ensure additional power that can be generated from the surplus steam using extraction turbine. Configuration for this alternative is shown in Fig. 4. The power generated is calculated as follow:

$$\text{Power, } W = m\,(h_1 - h_2)\times\eta \qquad (1)$$

Where:
W = Power
$h_1$ and $h_2$ = Enthalpy of steam at inlet and outlet of turbine, respectively
$\eta$ = Efficiency of turbine

Power, $W_1$ = m $(h_1\text{-}h_2)\times\eta$ = 31040 kg $h^{-1}$ (2703-2510.37)×60% = 998.5 kWe

Power, $W_2$ = m $(h_1 - h_2)\times\eta$ = 960 kg $h^{-1}$ (2703-251.423) ×60% = 392.25 kWe

Total power, $W_1$+$W_2$ = 1390.75 kWe

Alternative 3 is able to fulfill the power demand of the entire plant and will eliminate the import power from generator set. Additionally, alternative 3 ensures that surplus steam will not be wasted by venting out to the atmosphere. This expansion to condensate surplus steam will be used to generate additional power through using extraction turbine. The changes in steam balance that have to be evaluated are as follows:

- Purchase of new extraction turbine will require higher capital cost than Alternative 2 and lower capital cost than Alternative 1
- Use of existing boiler to generate steam at 32,000 kg $h^{-1}$ maximum capacity. There will be no surplus fuel left
- No letdown of steam from HP Steam Main to LP Steam main
- No more steam need to be venting out to the atmosphere. No wastages of steam
- Additional power of 90 kWe can be generated

**Phase two: Engineering economy analysis:** All the alternatives are feasible and comply with the power requirement for the existing plant. The engineering

economic analysis was carried out to identify the appropriate retrofit design taken into account Minimum Acceptable Rate of Return (MARR) of the company and the equipment life.

**Formulation of economic model:** Net present worth, external rate of return and sensitivity analysis are adopted for the analysis.

**Net present worth (PW):** Discount future amounts to the present by using the interest rate over the appropriate study period (Sullivan *et al*., 2009):

$$PW = \sum_{k=0}^{N} F_k (1+i)^{-k} \quad (2)$$

Where:
i = MARR per compounding period
k = Index for each compounding period
$F_k$ = Future cash flow at the end of period k
N = No. of compounding periods in study period

**Note:** If PW>0, it is economically justified.

**External rate of return, (ERR):** The External Reinvestment Rate, ε is considered = MARR

Therefore:

$$\sum E_k (P/F, \varepsilon\%, k) = \sum R_k (P/F, \varepsilon\%, N-k) \quad (3)$$

Where:
$R_k$ = Inflow in period k
$E_k$ = Outflow in period k
N = Study period

**Sensitivity analysis:** This method is used to examine the effect on the most-likely values of PW of the proposal to the variations in the input variables namely revenues, costs, study duration, salvage value or the rate of return, to name a few. It is a methodology to provide information pertaining to the impact of uncertainty of the input variables to the PW. The relative magnitude of change in the PW is investigated by varying the value of one input variable at a time, while the values of the other variables remain the same. Some of the variables have greater influence on the economic feasibility of the proposal than the others. With the sensitivity plot, the impact of the variation in the estimates of each variable on the PW is visible. The slope of the plot show how sensitive the PW is to changes in each variable. The analysis will adopt spider plot method. The factors that will be evaluated are; capital investment, revenue from diesel saving, operating cost and maintenance cost.

The sensitive analysis was done by evaluating the deviation of the selected factors against Present Worth, PW up to 40%.

## RESULTS AND DISCUSSION

**Costs and revenues:** The related costs for the three alternatives are tabulated in Table 2. The costs are capital cost (CI), import duty, Operation and Maintenance (O and M), Periodic Maintenance (PM) and Salvage Value (SV). There are substantial difference on capital costs for the three alternatives, with alternative 1 the highest amounting RM 3.6 million , which is due to purchase of boiler. The high capacity extraction turbine for alternative 3 is RM 1.275 million. Lowest capital cost is RM 0.85 million which is for alternative 2 as it involves only installation of back pressure steam turbine.

The annual O and M costs are RM 0.389, 0.309 and 0.886 million for alternative 1, alternative 2 and alternative 3, respectively. While the annual revenues are RM 1.542, 1.581 and 1.568 million for alternative 1, alternative 2 and alternative 3, respectively. Alternative 1 will have to incur PM of RM 0.048 million for every 2 years. The alternative 2 and alternative 3 will earn salvage values of RM 0.153 and 0.225 million, respectively.

The Minimum Acceptable Rate of Return (MARR) specified by the management of the company is 15%. Based on this MARR value and equipment life of ten years the calculated values of PW and ERR for the three alternatives is tabulated in Table 3.

Table 2: Cost data for the three alternatives covering CAPEX, import duty, annual operating and maintenance expenses, preventive maintenance (every 2 years for alternative 1), salvage value and annual revenues

| Items | Alternative 1 RM, million | Alternative 2 RM, million | Alternative 3 RM, million |
|---|---|---|---|
| CAPEX | (3.6) | (0.85) | (1.275) |
| Import duty (Indonesia -20%) | (0.72) | (0.17) | (0.225) |
| O and M | (0.398) year$^{-1}$ | (0.309) year$^{-1}$ | (0.886) |
| PM | (0.048) 2 years$^{-1}$ | 0 | 0 |
| SV | 0 | 0.153 | 0.225 |
| Revenue (year$^{-1}$) | 1.542 | 1.581 | 1.568 |

CAPEX: Capital expenses, O and M: Operation and maintenance, PM: Periodic maintenance, SV: Salvage value

Table 3: PW and ERR for the three options (MARR =15%, N = 10 years)

| Items | Alternative 1 RM, million | Alternative 2 RM, million | Alternative 3 RM, million |
|---|---|---|---|
| PW | 1.322 | 5.405 | 4.752 |
| ERR (%) | 17.17 | 28.79 | 26.03 |

PW: Present worth, ERR: External rate of return, MARR: Minimum acceptable rate of return, N: Project period

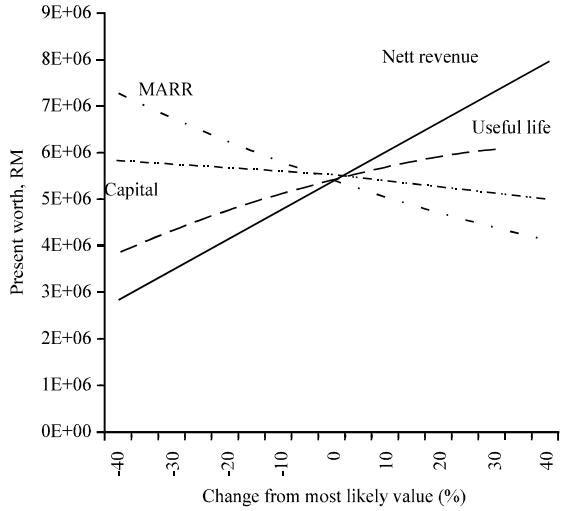


Fig. 5: Sensitivity graph for alternative 2 which indicates the MARR and revenue are the most influencing factors to present worth

The PW for the alternative 2 is RM 5.405 million that is the highest among the three alternatives. Hence, this is the preferred alternative. The ERR of Alternative 2 is 28.79% which is higher than the MARR of 15%. Based on these economic analyses, the company should install back pressure steam turbine.

**Sensitivity analysis:** The sensitivity analysis for alternative 2 was done using spider plot as shown in Fig. 5. The sensitivity analysis was evaluated between -40 and +40% for the capital investment, annual revenue, annual operating cost and salvage. The plot indicates that the annual revenue is the most influencing factor to the PW. Hence the revenue needs to be carefully monitored to ensure optimum return to the project.

It has been identified by Bazmi *et al.* (2011), that cogeneration system as highlighted in this case study, is suitable for decentralized power generating system. For palm oil mills in Malaysia, with substantial amount of power generated by using EFB at the mills (Shafie *et al.*, 2012), effort should made to enhance the available cogeneration systems at the respective mills. The approach adopted in this case study could be useful for this purpose.

## CONCLUSION

The application of techno-economic evaluation for the case study enables both the technical and economic evaluation to be taken into consideration for evaluating the case study. The technical aspect was evaluated based on technical criteria namely the capacity of the system to meet the increase in power requirements. While economic evaluation provides opportunity to select the best alternative based on present worth analysis. The sensitivity analysis enables the identification of cost elements that influence the present worth. The approach has enabled the management to integrate the technical and economic decisions. This approach could be useful for the local palm oil mills in enhancing their cogeneration systems at their mills.

## ACKNOWLEDGMENTS

Authors would like to acknowledge the support of Universiti Teknologi Petronas for this Project.

## REFERENCES

Bazmi, A.A., G. Zahedi and H. Hashim, 2011. Progress and challenges in utilization of palm oil biomass as fuel for decentralized electricity generation. Renewable Sustainable Energy Rev., 15: 574-583.

Begum, S. and M.F.M. Saad, 2013. Techno-economic analysis of electricity generation from biogas using palm oil waste. Asian J. Scient. Res., 6: 290-298.

Husain, Z., Z.A. Zainal and M.Z. Abdullah, 2003. Analysis of biomass-residue-based cogeneration system in palm oil mills. Biomass Bioenergy, 24: 117-124.

Kalinci, Y., A. Hepbasli and I. Dincer, 2011. Comparative exergetic performance analysis of hydrogen production from oil palm wastes and some other biomasses. Int. J. Hydrogen Energy, 36: 11399-11407.

Shafie, S.M., T.M.I. Mahlia, H.H. Masjuki and A. Andriyana, 2011. Current energy usage and sustainable energy in Malaysia: A review. Renew. Sustainable Energy Rev., 15: 4370-4377.

Shafie, S.M., T.M.I. Mahlia, H.H. Masjuki and A. Ahmad-Yazid, 2012. A review on electricity generation based on biomass residue in Malaysia. Renewable Sustainable Energy Rev., 16: 5879-5889.

Sullivan, W.G., M. Elinm, C. Wicks and P. Koelling, 2009. Engineering Economy. 4th Edn., Pearson Education, New Jersey, USA.

Sumathi, S., S.P. Chai and A.R. Mohamed, 2008. Utilization of oil palm as a source of renewable energy in Malaysia. Renewable Sustainable Energy Rev., 9: 2404-2421.