Journal of Environmental Science and Technology

ISSN 1994-7887

science alert

ANSInet
an open access publisher
http://ansinet.com

OPEN ACCESS Journal of Environmental Science and Technology

ISSN 1994-7887
DOI: 10.3923/jest.2016.472.480

Research Article
Design and Performance Analysis of a Solar Powered Hybrid Rickshaw for Commercial Use in Pakistan

[1]N. Saleh, [2]K. Mushtaq, [2]A.A. Zaidi, [2]S. Abbasoğlu and [1]S. Faiz Ahmed

[1]British Malaysian Institute, Universiti Kuala Lumpur, Bt. 8, Jalan Sungai Pusu, 53100 Gombak, Selangor, Malaysia
[2]Department of Energy Systems Engineering, Cyprus International University, North Cyprus

Abstract
The energy sector of Pakistan is not well developed and it is also inadequately managed. Due to this fact currently the country is facing severe energy crisis and large share of the energy sources are consumed by automobiles. In order to contribute in solving energy crisis problem, there is a need to increase awareness of using alternate fuel for automobiles and also to propose an alternate solution for conventional rickshaw which is the most famous mean of transport for local public in Pakistan. The main issue with conventional rickshaw is high fuel cost, high noise pollution, high maintenance cost, less mileage and high smoke pollution. The solar powered hybrid rickshaw (S-rickshaw) product is designed and fabricated to overcome these issues. The product efficiency is enhanced to make it feasible as compared to fuel prices and cartridge battery system is introduced to enhance its availability. The concept of solar charging stations for Karachi, Pakistan is proposed to make the product commercially viable. The four prototypes for passenger type rickshaws and one prototype for cargo loading type are fabricated to check the results. The performance of solar powered hybrid rickshaw is tested through average speed analysis test i.e., 40 km h^{-1}, mileage per charge i.e., 40 km $charge^{-1}$, charging time for batteries is 8 h, tyre load index is 71 and stopping distance at maximum speed of 50 km h^{-1} is 14 m. The breakeven time period of S-rickshaw is higher than the E-rickshaw because of higher initial investment but this is compensated by lower operational cost per year. As resultant the user get higher annual savings from the product. Annual saving difference for S-rickshaw will be US $468 higher than E-rickshaw and US $1350 higher than the conventional rickshaw (C-rickshaw).

Key words: Renewable energy, solar hybrid, solar rickshaw, solar powered vehicle, smoke pollution

Received: July 13, 2016 Accepted: September 28, 2016 Published: October 15, 2016

Citation: N. Saleh, K. Mushtaq, A.A. Zaidi, S. Abbasoglu and S. Faiz Ahmed, 2016. Design and performance analysis of a solar powered hybrid rickshaw for commercial use in Pakistan. J. Environ. Sci. Technol., 9: 472-480.

Corresponding Author: N. Saleh, Universiti Kuala Lumpur, British Malaysian Institute, Bt. 8, Jalan Sungai Pusu, 53100 Gombak, Selangor, Malaysia

Competing Interest: The authors have declared that no competing interest exists.

Data Availability: All relevant data are within the paper and its supporting information files.

INTRODUCTION

Energy plays a pivotal role for the economic development of a country. Pakistan is facing severe energy crises and also an energy deficient country. Pakistan is ranked 33 among the consumption of refined petroleum products by the world countries. Pakistan's consumption of refined petroleum products is 426,700 and 151,200 barrels day^{-1} of fuel is imported daily[1]. Most of the energy resources are consumed in automobiles and is consuming fuel of nearly 90,000 barrels day^{-1} which is 21% of the total daily requirement. In order to contribute in solving energy crisis problem, there is a need to increase awareness of using alternate fuel for automobiles and also to propose an alternate solution for conventional rickshaw which is the most famous mean of transport for local public in Pakistan.

Rickshaws are small three wheeled vehicles which are used extensively in many Asian countries for transportation of people and goods. These vehicles are small and narrow allowing easy manoeuvrability in congested Asian metropolises. Pakistan is home of more than a thousands of rickshaws. It is most famous mean of transport for local public in Pakistan. A two or four stroke gasoline engine usually powers these vehicles. Thus, rickshaws are typically highly polluting. In recent years, alternatives such as CNG and LPG models have been introduced to deal with the pollution problem. While these vehicles reduce the amount of particulate matter and other harmful pollutants they do not eliminate them and cities where rickshaws are numerous will continue to have poor air quality[2].

Electric rickshaws are most popular in Asia. The low cost Chinese version of the E-rickshaw was being the first to show up on streets. They are mostly used in China, India, Bangladesh and Nepal, also in low numbers other parts of Asia they have been showing up. China, Japan, India and European countries (Switzerland, France and Germany) have researched and developed electric tricycles for commercial transport and are attempting to capture the growing market in Asia.

The first attempt to design electric rickshaws was done by Nimbkar Agricultural Research Institute in late 1990s[3]. They modified the cycle rickshaw and then converted it to an electric one. In India they are popularly known as E-rickshaws as shown in Fig. 1 and are widely spread all over India. They started to gain popularity in India since, 2011. They have provided public transport service to city and have also contributed in providing livelihood to people in India[4]. The number of E-rickshaws in Delhi as per government officials by April, 2012 was over[5,6] 100,000. The E-rickshaws in India are normally designed for 4-5 passengers with loading capacity of 250-500 kg, power ranges from 650-1000 W and speed range from 20-50 km h^{-1}. Nearly, all companies claimed to be manufacturing the vehicle are merely importing it from China and assembling them locally[5].

Fig. 1: Electric rickshaw from China for India

Bangladeshi market imports electric rickshaws directly from China or via other countries. The well-established cities prefer them as cheaper and better means of transport. The government in an inter-ministerial meeting on 5 May banned import and assembly of the vehicles and decided to send off-road those already plying, primarily on the ground that it consumes electricity mostly[5-7].

China is the largest manufacturer of electric rickshaws in the world due to low labour cost, high production rates and encouraging government policies on foreign trade they export a large number on daily basis[5]. The E-rickshaw prices in china ranges from US $800-1500. Through large manufacturing plants and high export rates, the quality of electric rickshaws is produced as per cost of the product. China also manufactures a variety of cheap vehicles but most of them require government approval to be used, so the electric tricycle known as electric rickshaw is the most popular in export of these vehicles. In Haikou, the capital of China's Southern most province of Hainan, electric rickshaws and some manual types completely replaced auto rickshaws as shown in Fig. 2. These may be heavy, purpose-built vehicles or simple bicycles attached to a light chassis, with a small electric motor housed underneath.

Some of electric rickshaw known as "Velo" in Europe is also version of electric rickshaws popular in Asia. Velo is shown in Fig. 3.

Numerous factors are available to check feasibility of any product but mostly the local public, which are users of the S-rickshaw consider the economic aspect first. Therefore, first of all economic feasibility of the product is checked prior to designing and fabrication of the product. The price of conventional rickshaw available in the market is in the range of US $2250-US $2500. The lower price range i.e., US $2250 was set as benchmark budget for this product. The product was successfully designed and fabricated within this range.

Fig. 2: An electric rickshaw in Haikou, Hainan, China

Fig. 3: Velocar

MATERIALS AND METHODS

The electric rickshaw (E-rickshaw) is basically converted into solar powered hybrid rickshaw (S-rickshaw). The electric rickshaw (E-rickshaw) is already available in the market. The Chinese companies and some of the Indian companies are manufacturing the E-rickshaw in good qualities on mass scale production level. It was decided during the development phase of the product that already manufactured E-rickshaw should be used to produce a S-rickshaw. This decision is taken in order to reduce the variables affecting the performance of the end product i.e., S-rickshaw. The E-rickshaw which is a product already being manufactured at mass scale should be used for prototype and then after getting successful experience, separate mass scale production of S-rickshaw can be started. The methodology is summarized in the flowchart as shown in Fig. 4.

Explanation of hybrid concept: The term hybrid is normally used for the vehicles having combination of fossil fuel source and electric power source from the battery. But in this study, the term hybrid represents the combination of solar power source and electric power source from battery pack.

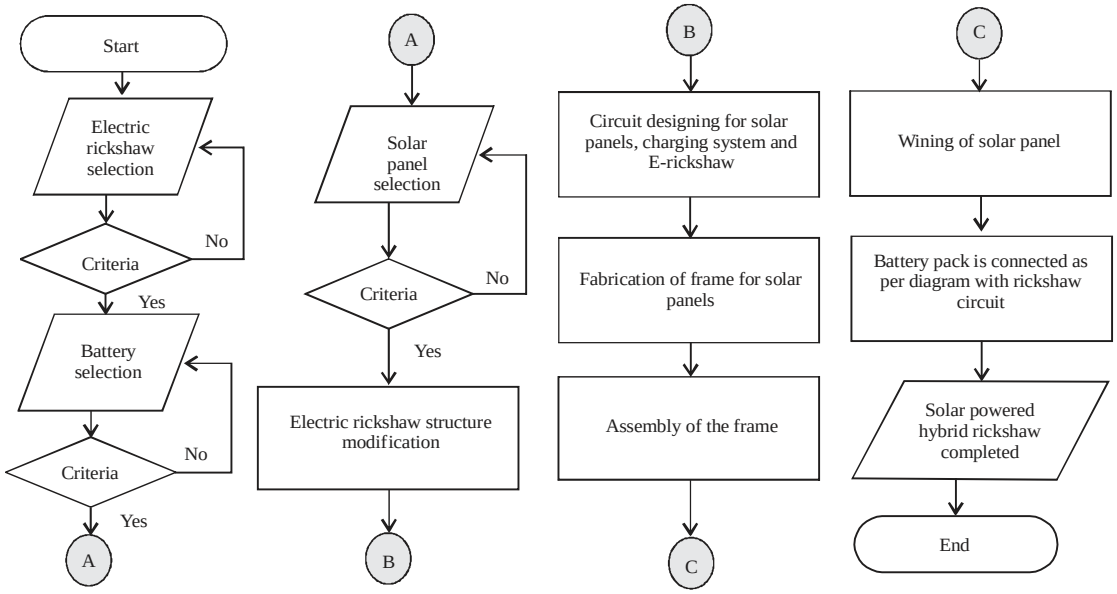

Fig. 4: Flowchart to show design methodology of S-rickshaw

The conventional electric rickshaw is converted into solar powered rickshaw (S-rickshaw) but it is ensured that the electricity supply will only be used as contingency. The user may charge the batteries through conventional power supply in case of emergency.

Material selection phase: This phase consists of selection of major components and parts of S-rickshaw keeping in view the specific selection criteria.

Electric rickshaw selection criteria: There are many manufacturers available which are producing E-rickshaws but all of them are producing nearly same type of products. Three different manufacturers are compared with each other to select the one for the S-rickshaw designing and fabrication. It is selected considering the factors of maximum load capacity, top speed, cost, number of passengers and motor rating. This selection is summarized in Table 1 and product C is chosen for this purpose. It is selected because it has high specifications at economical cost. The picture of the selected E-rickshaw is shown in Fig. 5.

Battery selection criteria: The battery is critical element of the E-rickshaw and its selection is very important to get desired performance of the product. The electric system of E-rickshaw is of 48 V therefore, it is a limitation to select 4 batteries each of 12 V, so that complete electric system will be of same voltage level. The selection is summarized in the Table 2.

Solar panels selection criteria: The electric system of E-rickshaw is of 48 V therefore, it is a limitation to select 2 solar panels each of 24 V, so that complete electric system will be of same voltage level. Solar panel selection is summarized in Table 3.

Fig. 5(a-b): Romai, China electric rickshaw is selected for design and fabrication of solar powered hybrid rickshaw (S-rickshaw)

Table 1: Electric rickshaw selection critera

Specification	Saera electric auto Pvt., Ltd., India (A)	Qlangsheng, China (B)	Romai, China (C)
Max load capacity	250 kg	400 kg	500 kg
Top speed	30 km h^{-1}	35 km h^{-1}	50 km h^{-1}
Cost	US $950	US $1100	US $1500
No of passenger (including driver)	6 persons	5 persons	6 persons
Motor rating	650 W	800 W	1000 W
Motor voltage	48 V	48 V	48 V
Motor current consumption	14 A	17 A	20 A

Table 2: Battery selection criteria

Equipment	Current draw	Time active (h)	Average current
Motor	21 A	0.5	10.5
Headlight	0.3 A	0.33	0.1
Indicators	0.3 A	0.33	0.1
Total average current			10.7
Desired run time in days	0.5	x24	12
Total average current × total hours = Calculated battery size			128.4
Efficiency factor	1.2	xCalc battery size	154.8 Ah

Table 3: Solar panel selection criteria

Description	Values
Battery size (Ah)	154.8
Total recharge time (h)	10
Calculated charge current: Battery (Ah)/charge time	15.48
Average system current	10.7
Total current required: Charge current+average system current	26.108
Calculated panel size: Total current required×24.0 V	626.592
Next available panel size	800 W

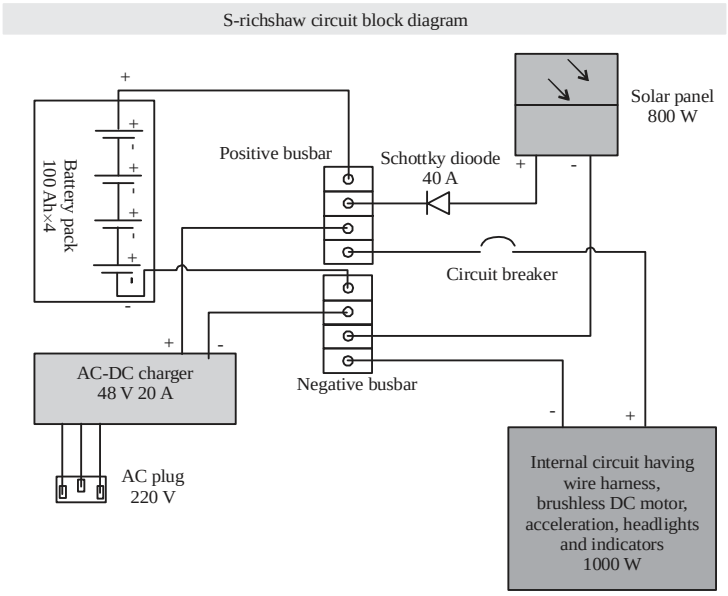

Fig. 6: Circuit block diagram of solar powered hybrid rickshaw (S-rickshaw)

Designing phase

Electric rickshaw structure modification: Additional columns and a frame were included in the design for fixing of solar panels and its wiring. Battery compartment was strengthened to accommodate more batteries. It is further described in the manufacturing phase and also shown in Fig. 4 and 5.

Circuit diagram for solar panels, charging system and E-rickshaw: The circuit diagram was designed and tested prior to manufacturing phase, in order to incorporate these changes during manufacturing phase. The circuit block diagram having solar panels, charging system and E-rickshaw is shown in Fig. 6.

Prototype manufacturing phase

Fabrication of modified structure for S-rickshaw: The fabrication of S-rickshaw was comprised of following steps:

Fig. 7: Frame for solar panel installation

Step 1: The metallic steel frame is fabricated as per the dimensions of solar panel. The frame consists of angle bars welded together and small holes were drilled to install two solar panels each of 400 W capacity through screws. The rubber packing is put in between the solar panel border and angles to reduce the vibrations during product operation. The output of this step is shown in the Fig. 7

Fig. 8(a-b): Fixing of the structure on the body of (a) E-rickshaw to convert it into (b) S-rickshaw

Fig. 9: Fixing of the solar panel on the frame through screw arrangement

Step 2: The frame was then welded on the columns raised from the body of the E-rickshaw and all these columns are given strength by bolting them with chassis of the E-rickshaw. These arrangements help to counter the instability caused by additional structure on the body of E-rickshaw. In two prototypes one inch diameter pipe is bended in the shape of columns and it is done to reduce the production time and to increase frame strength. The output of this step is shown in the Fig. 8

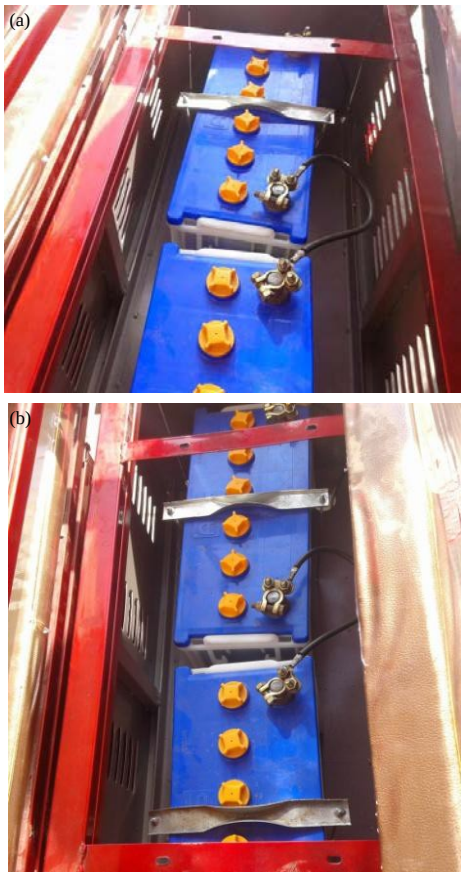

Fig. 10(a-b): (a) Batteries compartment and (b) Batteries connection in series

Step 3: Before putting the solar panels on the top of welded frame, polycarbonate blue colour sheet was put beneath the solar panel. This sheet acts as an insulator and resists the heat coming from rooftop solar panels. This help to increase the comfort of the passengers travelling in the S-rickshaw. After placement of sheet, wiring of the solar panel is done as per circuit diagram shown in Fig. 3 and then two solar panels fixed on the top through screw arrangement as shown in Fig. 9

Step 4: The wires are then connected with battery and schottky diode (40 A rating) is connected to one wire of the solar panel to save solar panel from reverse current of charger or battery. The batteries are connected in series to have 48 V electric system which is required for brush-less dc motor operation. The batteries are secured in the compartment through battery holder clips. The output is shown in Fig. 10

Step 5: The batteries are connected through bus-bar having connections as per circuit diagram shown in Fig. 6. The connections are shown in Fig. 11

Step 6: The complete fabricated structured is painted with red colour and then side mirrors are attached to increase the road worthiness of the S-rickshaw. The completed prototype is shown in Fig. 12

Fig. 11: Charger compartment and bus-bar connections

Fig. 12: Completed prototypes of solar powered hybrid rickshaw (S-rickshaw)

Proposed plan to make s-rickshaw as a commercially viable product: The major hindrance in the feasibility of the solar powered rickshaw is that consumer is worried that if batteries of his S-rickshaw get discharged for any reason or if there is no sunny weather on that particular day. Although S-rickshaw has built-in AC-DC Charger but using that charger on daily basis may increase the operational cost of the product and become an additional burden on the economy of Pakistan by consuming more electrical energy during the crisis period. Therefore in order to overcome this issue the concept of solar charging stations is introduced to make this product and all other electric vehicles to be commercially viable.

S-rickshaw will contain the cartridge battery pack and during the operation of the product the solar panels fitted on the S-rickshaw will charge the battery as well as operate S-rickshaw. In case of excessive discharge due to any reason, consumer will have the opportunity to go to solar powered charging station to swap its discharge cartridge battery pack with charged battery pack. This helps him to save time spent on the charging of the battery and it is also economically feasible because extra battery pack is the property of solar charging station. It means that he is paying for just the energy he is consuming at his S-rickshaw.

It is proposed to install three charging stations with capacity of 4 kW each as calculated in Table 4 and it is at two locations as mentioned in the Fig. 13.

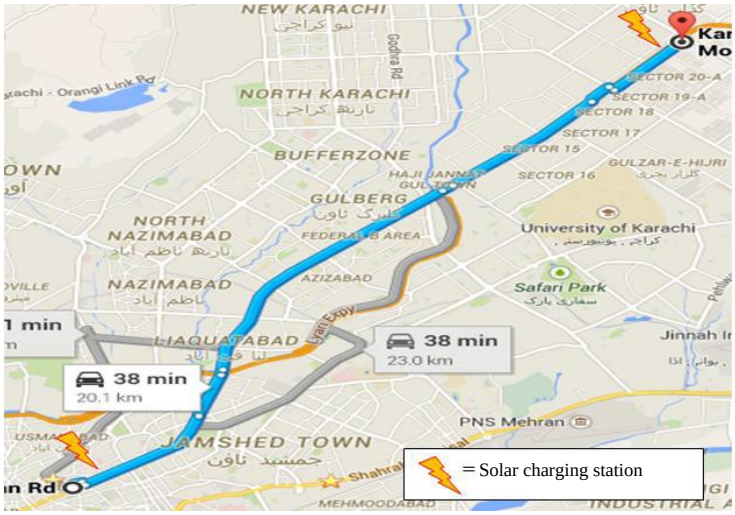

Fig. 13: Location of charging stations and the route where real time product testing conducted

RESULTS AND DISCUSSION

Technical analysis: Average speed analysis of S-rickshaw is carried out in real time by selecting three different routes and three observations have been taken during each trial. The average speed of the vehicle is observed to be 40 km h^{-1} after the modification as shown in Table 5.

The load index of S-rickshaw is calculated to find out the maximum load bearing capacity of each tyre and it is calculated in Table 6.

The tyres fitted in the prototype of S-rickshaw has load index 81 i.e., each tyre can bear load of 450 kg, therefore, calculation provides evidence that even tyre with load index of 71 can satisfy the load requirement. Hence, the vehicle can even perform well in the over loaded condition and has 12% safety factor to avoid tyre burst or punctures. The performance testing results comparison is presented in Table 7.

Economic analysis: The effect of the introducing S-rickshaws on the economic front can be gauged by the data analysis that will be done in this section. The rickshaws being operated in Karachi are either owned by the drivers or they are given to them for a daily rental cost. There are no formal financing options for the drivers and most of the owners buy it with the help of personal savings or borrowed money. These rickshaws run for small distances and ferry passengers on sharing- basis for nominal costs. Since there is no central rate system, the local unions form their own local rates according to distance and location. For the non-operative routes, the cost is considered according to individual case basis.

The parameters chosen for the study determine its role in the income and employment creation in Karachi. The breakeven time period for rickshaws was calculated by adding the annual charges which includes the initial investment and the annual costs such as the cost incurred to replace the batteries. This sum was divided by the net daily profit of the driver to get the breakeven time period. The values chosen to represent the system were mean values since the variation was not too great in most of the parameters. The economic analysis consists of breakeven time-period, annual cost comparison and annual savings comparison is summarized in Table 8.

Table 4: Solar charging station capacity calculation

Description	Values
Battery size (Ah)	154.8 Ah
Projected number of S-rickshaws	20
Capacity to be recharged considering 50% utilization c of charging stations [c = (axb)/2]	1548 Ah
Total recharge time (h)	6 h
Total calculated charge current: [c/d]	258 Ah
Calculated panel size: [e×12.0 V]	3096 W
Actual panel size considering 30% losses	4024.8 W
Solar charging station capacity	4.024 kW

Table 5: Average speed analysis of S-rickshaw

		Speed observation			
Route No.	Route name	1	2	3	Average speed
1	Liaquatabad to Ziauddin road	42	35	45	40.7
2	Liaquatabad to Ancholi	32	48	40	40.0
3	Liaquatabad to Civic center	40	35	47	40.7
4	Total average speed				40 km h^{-1}

Table 6: Load index calculations for S-rickshaw and E-rickshaw

Description	S-rickshaw (kg)	E-rickshaw (kg)
Normal weight	600	500
Front wheel weight	300	250
Rear axle weight	300	250
Tire load carrying capacity (300/0.88)	340.90	284.09
Nearest load index	71 (345)	65 (290)

Table 7: Performance testing results comparison between S-rickshaws and E-rickshaws

Description	Values	
	S-rickshaws	E-rickshaws
Brushless DC motor power	1000 W	1000 W
Average speed	40 km h^{-1}	40 km h^{-1}
Load index	71	65
Solar panel capacity	800 W	--
Solar charging current	13 A	--
Battery consumption in 12 h	155 Ah	155 Ah
Charging duration	12 h	12 h
Electricity consumed in daily charging	--	156 Rs day^{-1}
Mileage per charge	40 km $charge^{-1}$	50 km $charge^{-1}$
Battery pack	320 Ah	320 Ah
Stopping distance at 50 km h^{-1}	14 m	15 m

Table 8: Economic analysis comparison of S-rickshaw, E-rickshaw and C-rickshaw

Parameters	Solar rickshaw		Electric rickshaw		Conventional rickshaw	
	Mean values (Rs)	Mean values (US$)	Mean values (Rs)	Mean values (US$)	Mean values (Rs)	Mean values (US$)
Initial investment	225,000	2,250.0	150,000	1,500.0	225,000	2,250.0
Daily cost (Cleaning and tyre maintenance)	100	1.0	100	1	100	1
Daily electricity expense on battery charging	-	-	156	1.56	-	-
Daily fuel expense	-	-	-	-	450	4.50
Daily income with 8 h operation	1,440	14.4	1,440	14.4	1,440	14.4
Net daily profit	1,340	13.4	1,184	11.8	890	8.9
Battery replacement cost/other annual costs	25,000	250.0	25,000	250.0	25,000	250.0
Breakeven time period (days)	187		148		281	
Annual operational cost	30,000	300.0	76,800	768.0	165,000	1,650.0
Annual savings comparision	377,000	3,770.0	330,200	3,302.0	242,000	2,420.0

CONCLUSION

The breakeven time period of S-rickshaw is higher than the E-rickshaw because of higher initial investment but this is compensated by lower operational cost per year. As resultant the user get higher annual savings from the product. Annual saving difference for S-rickshaw will be US $468 higher than E-rickshaw and US $1350 higher than the conventional rickshaw (C-rickshaw). There are some discrepancies in the product which provide an opportunity to further increase the performance like utilization of high efficiency solar panels and utilization of deep cycle discharge batteries instead of lead acid batteries. The overall performance of prototypes of solar powered hybrid rickshaw was found to work satisfactorily. The implementation of the concept of cartridge battery in S-rickshaw and solar powered charging stations will make this product more commercially viable.

REFERENCES

1. Anonymous, 2011. Petroleum consumption/Countries of the world-world by map. http://world.bymap.org/Oil Consumption.html
2. Mallouh, M.A., B. Denman, B. Surgenor and B. Peppley, 2010. A study of fuel cell hybrid auto rickshaws using realistic urban drive cycles. Jordan J. Mechan. Ind. Eng., 4: 225-229.
3. Rajvanshi, A.K., 2002. Electric and improved cycle rickshaw as a sustainable transport system for India. Curr. Sci., 83: 703-707.
4. Bose, P.R., 2015. Cheap rides, low costs: It's Tuk-Tuk time in Tripura. Business Line. http://www.thehindubusinessline.com /news/national/cheap-rides-low-costs-its-tuktuk-time-in-tripura/article5690150.ece.
5. Jamil, F., 2014. Regulation threatens India's e-rickshaws. AlJazeera. http://www.aljazeera.com/indepth/features/ 2014/05/regulation-threatens-india-e-rickshaws-201451 331017908658.html.
6. Mehta, N., A. Raj and N. Sethi, 2014. Delhi auto expo: India chases electric mobility dream. http://www.livemint.com/ Industry/vGQ4bqUDEnQZtTeSOwRsBP/India-chases-electric-mobility-dream.html.
7. Ali, T., 2011. Electric rickshaws run out of steam. The Daily News. May 30, 2011. http://www.thedailystar.net/news-detail-187825.