Journal of Engineering and Applied Sciences 12 (Special Issue 6): 7785-7789, 2017
ISSN: 1816-949X
© Medwell Journals, 2017

Comparative Study of 5G Waveform-OFDM-ZT with LTE-OFDM

Ravi Sekhar Yarrabothu, Sri Vidya Vangala and A. Surendar
Departement of Electronics and Communication Engineering, Vignan's University, Guntur, India

Abstract: The present viable networking technologies have been using LTE extensively. LTE-OFDM diminishes the multipath fading effect and inter symbol interference. OFDM makes use of Cyclic Prefix (CP) for data transmitting. As a result of CP (redundant data) there is wastage of power and bandwidth. To cope up with 5th generation requirements like high speed data, Machine to Machine communication (M2M), less power consumption new technique has been implemented. In this study, one such system known as OFDM-ZT (Orthogonal Frequency Division Multiplexing-Zero Tail) is considered. This is simulated using MATLAB which shows an efficient spectrum usage. In OFDM-ZT instead of CP, a tail of zero bits is added to save power. Using MATLAB tool, the simulations are made to compare the performance of OFDM-ZT with LTE-OFDM in terms of power spectral density, CCDF which shows OFDM-ZT is better than LTE-OFDM.

Key words: 5G, OFDM-ZT, CP, CCDF, M2M, LTE-OFDM

INTRODUCTION

Third Generation (3G) phones were developed with a goal to improve the data capability and speed. Initialization of 3G phones was standardized by the Third Generation Partnership Project (3GPP) and then ITU-T has confirmed it to a standard. Generally, this 3G system is based on wideband CDMA that operates in bandwidth of range 5 MHz. To improve the better usage of the channel bandwidth LTE came into picture which is commonly termed as 4G but in reality it is just an improved 3G standard which can be termed as 3.9 G. CDMA in 3G is replaced by Orthogonal Frequency Division Multiplexing (OFDM) and OFDM access in 4G. The entire channel bandwidths of 5, 10 or 20 MHz wide divided into smaller sub-channels in this technique.

Multiple Input Multiple Output (MIMO) operation can also be performed by LTE (Ratasuk *et al*., 2014) where several transmitter-receiver-antennas are used. Wider bandwidth channels and a greater number of MIMO antennas make it possible to achieve the theoretical downlink data rates of 1 Gb/sec in LTE. The technique of OFDM is used along with the cyclic prefix in order to avoid the Inter Carrier Interference (ICI) and Inter Symbol Interference (ISI) (Govenkaya *et al*., 2015). For further more effective power and bandwidth usage, it has been proposed advancement in the existing technique which leads to OFDM-ZT. The technique of OFDM-ZT is implemented by replacing cyclic prefix with zero tail which makes efficient usage of bandwidth and the power. For 5th generation cellular communication one of the requirements is efficient bandwidth usage and less power consumption (Yarabothu and Mohan, 2015).

OFDM-Zero Tail system: Frequency Division Multiplexing (FDM) is a technique used in the telecommunications where the information is carried by separating the entire channel bandwidth into multiple narrow-band sub-carriers. Each subcarrier carries a separate signal. The use of narrow-band sub-channels makes the system very impervious to channel fading compared to a single wideband channel. In FDM, small gaps or guard bands between the carriers are provided to prevent Inter Carrier Interference (ICI) where no information can be transmitted. This results in a waste of spectrum.

To avoid this issue, OFDM-an improvised technique of Frequency-Division Multiplexing (FDM) have been introduced. OFDM uses special subcarriers that are all orthogonal to each other. This permits the omission of the guard bands. They can even overlap each other as sub-carriers do not relate each other. This is why OFDM is so bandwidth efficient. OFDM signal has a relatively high large dynamic range or peak to average power ratio. Cyclic prefix is the essential element used in OFDM which acts as the guard band between each OFDM symbol. As a result of this Inter Symbol Interference (ISI) and Inter Carrier Interference (ICI) can be reduced (Berardinelli *et al*., 2014).

Even though cyclic prefix protects the OFDM signals from Inter Symbol Interference (ISI) and Inter Carrier Interference (ICI) the main disadvantage of OFDM CP is that it re-transmits data that is already being transmitted. Due to this lot of power waste and bandwidth misuse is done. So, CP is replaced with Zero Tail (ZT), i.e., adding a tail of zeros in OFDM. This technique reduces the power wastage and efficient bandwidth usage is done.

Corresponding Author: Ravi Sekhar Yarrabothu, Departement of Electronics and Communication Engineering, Vignan's University, Guntur, India

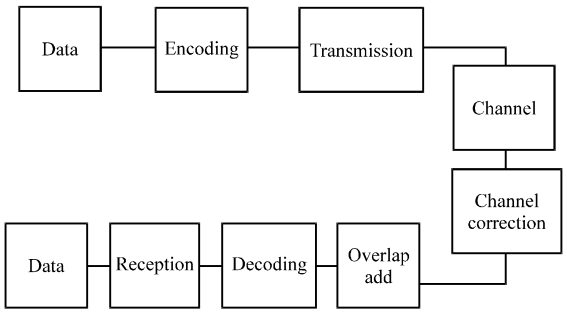

Fig. 1: Basic block diagram of OFDM-ZT

To overcome the deficits present in the OFDM technique, the OFDM-ZT is proposed in the current study. It has been observed an improvement of the performance in the power spectral density and PAPR. Peak-to-Average Power Ratio (PAPR) (Rajeswaran and Nair, 2016) plays a very vital role in the study of Orthogonal Frequency Division Multiplexing (OFDM). In a transmit OFDM symbol the rapport between the maximum power of a sample and its average power can be termed as the peak-to-average power ratio.

In preference to the transmitter and the receiver blocks the basic block diagram of the OFDM-ZT can be seen in Fig. 1.

OFDM-ZT transmitter: The OFDM reference model can act as reference to the changes in the further experimental models. By the use of the cyclic prefix in OFDM there is the occurrence of redundancy problems and synchronization problems. Hence, a lot of wastage of power and misuse of bandwidth will occur. In the further action, we are going to make some changes to the model by detaching the cyclic prefix and adding a tail of zeroes as an alternative as shown below. Now this symbols, instead of having a redundant header have a Tail of Zeros (ZT) at the end (Muquet *et al*., 2000). Symbol OFDM+Cyclic prefix can be shown as:

CP	N	CP	N	CP	N

Symbol OFDM + Zero Tail can be shown as:

N	ZT	N	ZT	N	ZT

The transmission structure of the system can be explained as shown in Fig. 2. Let us assume, a system formed by functions as given in Eq. 1:

$$\mu_0(x),\mu_1(x),\mu_2(x),...,\mu_n(x) \quad (1)$$

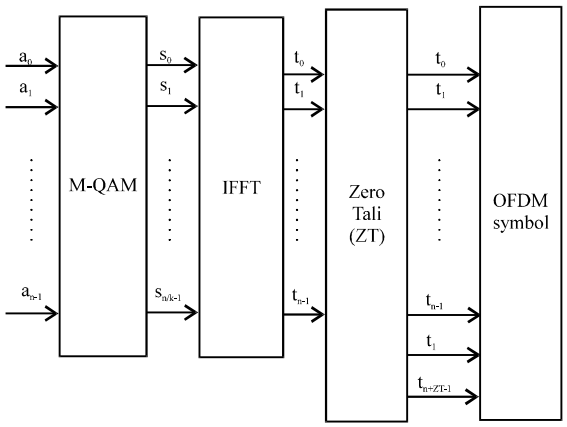

Fig. 2: Transmitter of OFDM-ZT

Based on the orthogonal principle of the sine signals, the Orthogonal Frequency Division Multiplexing (OFDM) is operated on. This systems orthogonal condition between the interval [a, b] can be given as in Eq. 2:

$$\int_a^b \mu_n(x)\mu_m(x)dx = 0(\neq m;n,m = 0,1,2,...) \quad (2)$$

At the same time the system has to verify the conditions of Eq. 3 and 4:

$$\int_a^b \mu_n(x)\mu_m(x)dx \neq 0(m = n) \quad (3)$$

$$\int_a^b \mu_n^2(x)dx \neq 0(n = 1,2,3,...,k) \quad (4)$$

By this we can achieve a system which is orthogonal with 2π interval of length and symbols can be transmitted without interfering between each other. The data that is going to be transmitted is to be first modulated. Here, QAM modulation is used which forms two information vectors that are in-phase and quadrature phase symbols.

OFDM-ZT receiver: As the tail of zeros also contains information the reception is done not only by considering the N time samples of the received symbol. This is because the convolution result that is to be transmitted is present in the tail of zeros also. In the OFDM reception, the information transmitted is redundant as it consists of the cyclic prefix. Here, the information of the tail of zeros can be taken into account by adding the zero tail sample values to the initial symbol samples (Ramavath and Kshetrimayum, 2012). This process is named as the overlap and add block convolution and the samples of OFDM symbol can be recovered and also the additional samples are getting rid of it (Fig. 3).

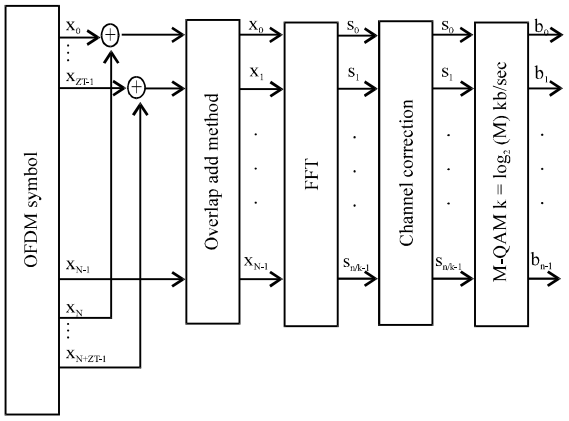

Fig. 3: Receiver of OFDM-ZT

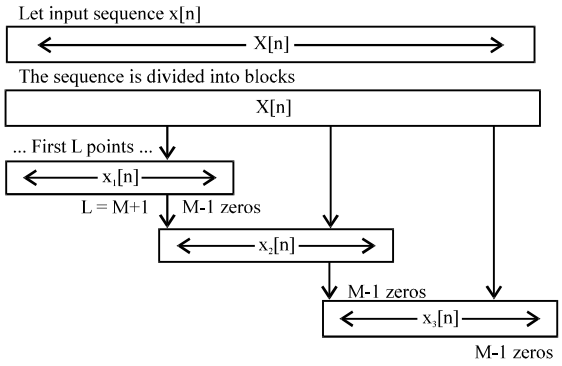

Fig. 4: Graphical illustration of overlap add

MATERIALS AND METHODS

By the use of Finite Impulse Response (FIR) the assessment of the discrete convolution of a signal can be achieved. For filtering the long sequence data the theme involved here is to split the issue into many convolutions of h[n] with small segments of x[n] where L is length of the segment which is shown in Fig. 4. As a result of this y[n] can be written as the addition of all small convolutions.

At the beginning the signal is divided into non-overlapping sequences. The multiplication of the FFT x[n] with FFT h[n] is done to obtain the discrete fourier transform. By applying inverse FFT, y[n] is obtained. Then the resulting output signal is renovated by overlapping and adding y[n]. The original sequences are always not larger than the linear convolution. So the fact of overlap emerges.

Channel estimation and correction: The signal at the receiving end has the effect of the multi-path channel even though we make use of the overlap-and-add block convolution method. The echoes effect on the signal can be indemnified by sending a test signal through the channel. Along with the test signal the zero tail insertion is also done as a result of which we can approximate the modification needed. The multi-path effect has to be treated more cautiously than the AWGN channel noise.

The both ends of the system have to be synchronized to estimate the channel. The test symbols that are going to be transmitted are known by the receiver. The symbols that are varied from the QAM constellation are only transmitted by the transmitter. Therefore, the symbol correction needed to reach the test symbol is calculated by the receiver.

RESULTS AND DISCUSSION

OFDM-ZT and OFDM-CP systems are simulated using MATLAB software. The waveforms, spectrum analysis and the CCDF analysis have also been represented below. The general input parameters used for the simulations are as shown in Table 1.

Power spectral density of OFDM vs. OFDM-ZT: The obtained waveform of the OFDM system has the cyclic prefix which is redundant data. As a result of which power usage has been increasing. In the case of the obtained waveform of the OFDM-ZT due to the presence of the zero tail the power usage is reduced a lot and the redundant data cannot be seen. This difference can be seen in Fig. 5.

The power is represented in function of the frequency in power spectral density. The similar power usage can be seen among two spectrums from Fig. 6. But by examining Fig. 6, carefully the both spectrums' has alike responses in terms of frequency. The variation between two systems can be observed from the low power values of the guard carriers. The OFDM CP oscillates between -100 and -50 dB. Whereas OFDM-ZT oscillates around -300 and -50 dB showing an improvement in power usage.

CCDF analysis of OFDM-ZT and OFDM: The performance of the signals on the origin of the power level can be easily studied by the help of the Complementary Cumulative Distribution Curve (CCDF). The time spent by the signal at a given power level can be shown by CCDF curve. In general, the power level is expressed in dB with relative to average power. The probability of the power level can be defined from the percentage of the time the signal present at each line.

The efficient usage of the OFDM-ZT over OFDM can be seen from the above represented graphs. The CCDF

Table 1: Input parameters of the simulation

Variables	Values
Size of signal constellation	64
No. of bits per symbol	6
No. of carriers	2048
No. of data carriers	1200
No. of guard carriers	848
No. of OFDM symbols input	100
Input No. of bits	720000
Cyclic prefix length	256
Zero tail length	256

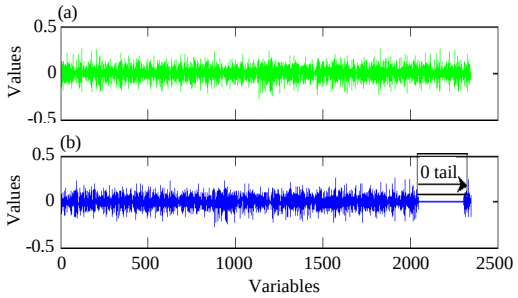

Fig. 5: a) OFDM and b) OFDM-ZT waveforms

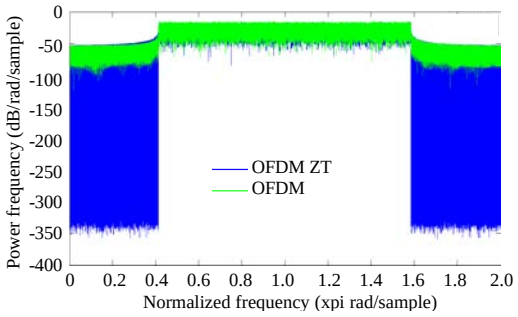

Fig. 6: Power spectral density diagram of OFDM and OFDM-ZT

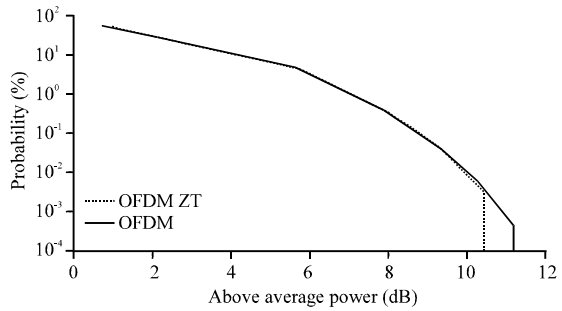

Fig. 7: CCDF analysis of OFDM and OFDM-ZT

analysis gives the better performance of the OFDM-ZT compared to OFDM. The power can be recorded in terms of dB as mentioned earlier. From Fig. 7, it is observed that the OFDM-ZT has low PAPR compared to OFDM. Both the CCDF curves start with a probability of 50%. We notice from the figure that OFDM-ZT curve terminates by consuming a low power of around 10.2 dB whereas the OFDM curve stops by consuming power up to 11 dB.

CONCLUSION

The simulation result shows the improved performance in the OFDM-ZT technique in major aspect of power.

RECOMMENDATIONS

The further research can be preceded on the OFDM-ZT-DFT technique. In this the trailing of zeros can be done in the time domain signal. By this technique the better results can be seen even at low power values of the power density spectrum.

REFERENCES

Berardinelli, G., F.M. Tavares, T.B. Sorensen, P. Mogensen and K. Pajukoski, 2014. On the potential of zero-tail DFT-spread-OFDM in 5G networks. Proceedings of the 2014 IEEE 80th Conference on Vehicular Technology (VTC Fall'14), September 14-17, 2014, IEEE, Vancouver, British Columbia, Canada, ISBN: 978-1-4799-4448-4, pp: 1-6.

Govenkaya, E., A. Sahin and H. Arslan, 2015. N-continuous OFDM with CP alignment. Proceedings of the 2015 IEEE Conference on Military Communications (MILCOM'15), October 26-28, 2015, IEEE, Tampa, Florida, ISBN: 978-1-5090-0073-9, pp: 587-592.

Muquet, B., M. de Courville, P. Dunamel and G. Giannakis, 2000. OFDM with trailing zeros versus OFDM with cyclic prefix: Links, comparisons and application to the HIPERLAN-2 system. Proceedings of the 2000 IEEE International Conference on Communications (ICC'2000) Vol. 2, June 18-22, 2000, IEEE, New Orleans, Louisiana, USA., ISBN:0-7803-6283-7, pp: 1049-1053.

Rajeswaran, D. and A.K. Nair, 2016. A novel approach for reduction of PAPR in OFDM communication. Proceedings of the 2016 International Conference on Communication and Signal Processing (ICCSP'16), April 6-8, 2016, IEEE, Melmaruvathur, India, ISBN: 978-1-4673-8549-7, pp: 1978-1981.

Ramavath, S. and R.S. Kshetrimayum, 2012. Analytical calculations of CCDF for some common PAPR reduction techniques in OFDM systems. Proceedings of the 2012 International Conference on Communications Devices and Intelligent Systems (CODIS'12), December 28-29, 2012, IEEE, Kolkata, India, ISBN: 978-1-4673-4699-3, pp: 393-396.

Ratasuk, R., N. Mangalvedhe and A. Ghosh, 2014. M2M communications in cellular network deployments using LTE. Proceedings of the 21st International Conference on Telecommunications (ICT'14), May 4-7, 2014, IEEE, Lisbon, Portugal, ISBN: 978-1-4799-5139-0, pp: 477-481.

Yarabothu, R.S. and J. Mohan, 2015. A survey paper on 5g cellular technologies: Technical and social challenges. Intl. J. Emerging Trends Electr. Electron., 11: 98-99.