International Journal of Electrical and Power Engineering 1 (2): 169-171, 2007
© Medwell Journals, 2007

Performance Investigation of Space-Time Coding Under Different Modulation Schemes

[1]Abdur Rahim, [1]Ali Haider and [2]A.N.M. Rezaul Karim
[1]Department of Computer and Communication Engineering,
International Islamic University, Chittagong, Bangladesh
[2]Department of Computer Science and Engineering, International Islamic University,
Chittagong 154/A College Road, Chittagong-4203, Bangladesh

Abstract: In this study we have investigated the performance of space-time coding over flat rayleigh fading channel under different modulation schemes, such as BPSK, QPSK, 8-PSK and 16-QAM. It is shown by computer simulation that the performance of BPSK is the best among the 4-types and QPSK is better than 8-PSK and 8-PSK is better than 16-QAM.

Key words: Rayleigh fading channel, space-time block codes, maximum likelihood decoding

INTRODUCTION

The next-generation wireless systems are required to have high voice quality as compared to current cellular mobile radio standards and provide high bit data services (up to 2 Mbps). In fact, it appears that base station complexity may be the only plausible trade space for achieving the requirements of next generation wireless systems.

The fundamental phenomenon which makes reliable wireless transmission difficult is time-varying multipath fading (Alamouti, 1998). Wireless channels exhibit a number of severe impairments, among which fading is one of the most severe. In addition, additive noise and interference have to be combated. For narrowband channels, the fading can often be assumed to be flat, while for wideband channels the fading is typically frequency selective. Much progress has been made to combat these types of impairments. Diversity is a classic method to improve transmission over fading channels. Recently, so-called space-time coding methods have been proposed to obtain both space and time diversity by using multiple transmit and receive antennas and matching coding (Lee *et al*., 2003).

In most scattering environments, antenna diversity is a practical, effective and hence a widely applied technique for reducing the effect of multipath fading. As a result, diversity techniques have almost exclusively been applied to base stations to improve the reception quality.

In recent years it has been realized that many of the benefits as well as substantial amount of performance gain of receive diversity can be reproduced by using multiple antennas at the transmitter to achieve transmit diversity. The development of transmit diversity was started in the early 1990's and since then the interest in the topic has grown in a rapid fashion (Erik and Petre, 2003). Until 1995, most work on wireless communications focused on having antenna array at only one end of the wireless link-usually at the receiver. In 1995, Emre Teletar published a seminar paper which, in 1998, inspired Gerard Foschini to demonstrate the substantial channel capacity improvements available by correctly using antenna arrays at both end of the link. Shortly afterwards, Siavash Alamouti and Vahid Tarokh, Hamid Jafarkhani and Rob Calderbank demonstrated how to use these multiple-input multiple-output systems to achieve significant error rate improvement-the scheme they invented is called Space-time Coding.

The purpose of this study is to evaluate the performance of space (meaning antenna)-time coding under different modulation schemes.

SYSTEM DESCRIPTION

A general configuration for Space-Time Block-Coding (STBC) system including two transmitters and one receiver is shown in Fig. 1. Actually, the two transmitters are integral part of the encoder. For convenience, we have shown it separately.

Here, the space-time block code is adapted to two transmit antennas. The two adjacent modulated data symbols x_1 and x_2 presented at the input of the space-time encoder for user are nth sent to antenna one and two, respectively (Branka, 2003). During the next period, $-x^*_2$ is

Corresponding Author: Abdur Rahim, Department of Computer and Communication Engineering, International Islamic University, Chittagong, Bangladesh

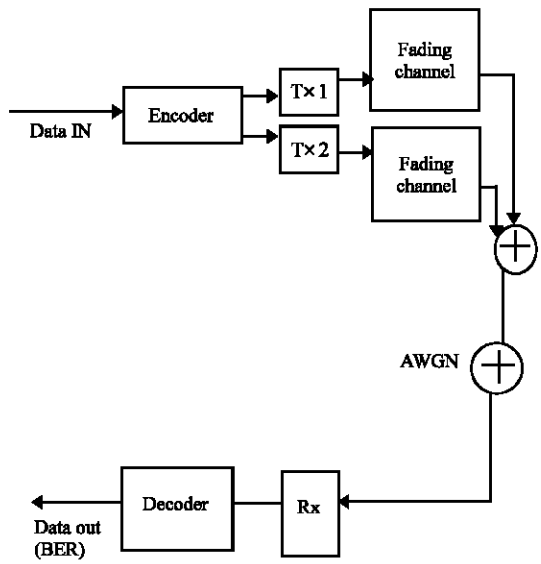

Fig. 1: System model

sent to antenna one and signal x^*_1 is sent to the antenna two. Later the transmitter output is sent to the Rayleigh Fading Channel. The receiver receives the data with noise and maximum likelihood decoder is used to decode the data. Finally, we have investigated the performance using several modulation schemes. The space-time block code including encoding and decoding algorithm is shown below.

Space-time block codes: Space-Time Block Codes (STBC) can be constructed for any number of transmit antennas. STBC provide diversity gain, with very low decoding complexity. It was originally proposed by (Alamouti, 1998) as a full rate code for two transmit antennas. The encoding and decoding algorithm for STBC is described as follows:

Encoding algorithm: A space-time block code is defined by a p' n transmission matrix G. The entries of the matrix G are linear combinations of the variables $x_1, x_2..., x_k$ and their conjugates. The number of transmission antennas is and it is usually used to separate different codes from each other represents a code which utilizes two transmit antennas and is defined by Vahid *et al.* (1999):

$$G_2 = \begin{matrix} x_1 & x_2 \\ -x_2^* & x_1^* \end{matrix} \tag{1}$$

the rate G_2 of is one.

The decoding algorithm: Maximum likelihood decoding of any space-time block code can be achieved using only linear processing at the receiver and we illustrate this by some examples. The space-time block code (first proposed by (Alamouti, 1998), uses the transmission matrix in Eq. 2.

$$r_t^j = \sum_{i=1}^{n} \alpha_{i,j} c_t^i + \eta_t^j \tag{2}$$

Where we have considered a wireless communication system with n antennas at the base station and m antennas at the remote. The channel is assumed to be a flat rayleigh fading channel and the path gain from transmit antenna i to receive antenna j is defined to be $\bullet_{i,j}$. The noise samples h^j_t are independent samples of a zero-mean complex Gaussian random variable with variance n/(2 SNR) per complex dimension. The coefficient $\bullet_{i,j}$ is the path gain from transmit antenna i to receive antenna j.

Suppose that there are 2^b signals in the constellation. At the first time slot 2b bits arrive at the encoder and select two complex symbols s_1 and. These symbols are transmitted simultaneously from antennas one and two, respectively. At the second time slot, signals s_2^* and s_1^* are transmitted simultaneously from antennas one and two, respectively. Then maximum likelihood detection amounts (Vahid *et al.*, 1999) to minimizing the decision metric:

$$\sum_{j=1}^{m} \left(\left| r_1^j - \alpha_{1,j} s_1 - \alpha_{2,j} s_2 \right|^2 + \left| r_2^j + \alpha_{1,j} s_2^* - \alpha_{2,j} s_1^* \right|^2 \right) \tag{3}$$

over all possible values of s_1 and s_2. Note that due to the quasi-static nature of the channel, the path gains are constant over two transmissions. The minimizing values are the receiver estimates of s_1 and s_2, respectively. We expand the above metric and delete the terms that are independent of the codewords and observe that the above minimization is equivalent to minimizing (Vahid *et al.*, 1999).

$$\begin{aligned} -\sum_{j=1}^{m} & [r_1^j \alpha_{1,j}^* s_1^* + (r_1^j)^* \alpha_{1,j} s_1 + r_1^j \alpha_{2,j}^* s_2^* + \\ & (r_1^j)^* \alpha_{2,j} s_2 - r_2^j \alpha_{1,j}^* s_2 - (r_2^j)^* \alpha_{1,j} s_2^* + r_2^j \alpha_{2,j}^* s_1 + \\ & (r_2^j)^* \alpha_{2,j} s_1^*] + (|s_1|^2 + |s_2|^2) \sum_{j=1}^{m} \sum_{i=1}^{2} |\alpha_{i,j}|^2 \end{aligned} \tag{4}$$

The above metric decomposes into two parts, one of which (Vahid *et al.*, 1999).

$$-\sum_{j=1}^{m}[r_1^j\alpha_{1,j}^*s_1^*+(r_1^j)^*\alpha_{1,j}s_1+r_2^j\alpha_{2,j}^*s_1 +(r_2^j)^*\alpha_{2,j}s_1^*]+|s_1|^2+\sum_{j=1}^{m}\sum_{j=1}^{2}|\alpha_{i,j}|^2 \quad (5)$$

only a function of s_1 and the other one

$$-\sum_{j=1}^{m}[r_1^j\alpha_{2,j}^*s_2^*+(r_1^j)^*\alpha_{2,j}s_2-r_2^j\alpha_{1,j}^*s_2 -(r_2^j)^*\alpha_{1,j}s_2^*]+|s_2|^2\sum_{j=1}^{m}\sum_{j=1}^{2}|\alpha_{i,j}|^2 \quad (6)$$

only a function of s_2. Thus the minimization of (6) is equivalent to minimizing these two parts separately. This in turn is equivalent to minimizing the decision metric (Vahid *et al*., 1999).

$$\left|\sum_{j=1}^{m}\left(r_1^j\alpha_{1,j}^*+(r_2^j)^*\alpha_{2,j}\right)-s_1\right|^2+ -1+\sum_{j=1}^{m}\sum_{i=1}^{2}|\alpha_{i,j}|^2\,|s_1|^2 \quad (7)$$

for detecting s_1 and the decision metric

$$\left|\sum_{j=1}^{m}\left(r_1^j\alpha_{2,j}^*+(r_2^j)^*\alpha_{1,j}\right)-s_2\right|^2+ -1+\sum_{j=1}^{m}\sum_{i=1}^{2}|\alpha_{i,j}|^2\,|s_2|^2 \quad (8)$$

for decoding s_2. his is the simple decoding scheme described (Alamouti, 1998).

RESULTS AND DISCUSSION

In this study, we present our simulation results and discussion about it. Here we have considered two transmit antenna and one receiver antenna for space time block coding with rate one code. We have performed our investigation for the STBC over the flat rayleigh fading channel using the 4-types of modulation schemes, such as BPSK, QPSK, 8-PSK and 16-QAM. The simulation result has been shown in Fig. 2 and it is observed that the performance of Binary Phase Shift Keying (BPSK) is the best among the 4-types and QPSK (Quadrature Phase Shift Keying) is better than 8-PSK and 8-PSK is better than 16-QAM.

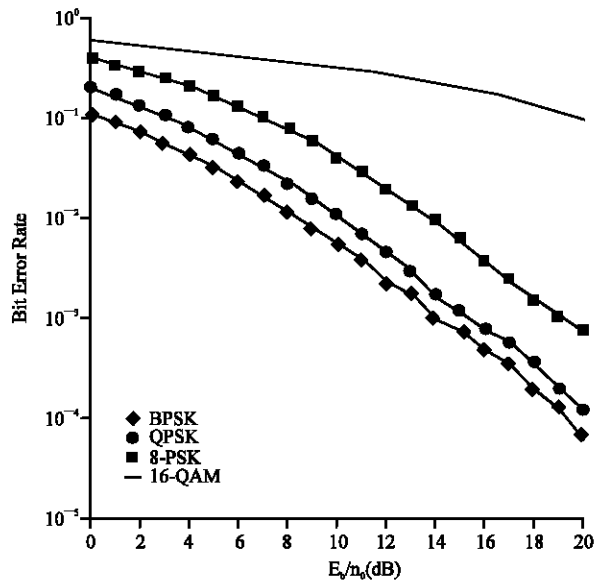

Fig. 2: Performance of space-time block coding

CONCLUSION

We have investigated the performance of Space-time Coding more specifically on Space-time block code over the flat rayleigh fading channel under different modulation schemes such as BPSK, QPSK, 8-PSK, 16-QAM and it is observed from the simulation result that the performance of the BPSK is the best among the 4-types of modulation scheme.

REFERENCES

Alamouti, S.M., 1998. A simple transmit diversity technique for wireless communications IEEE. J. Selected Areas Commun., 16: 1451-1458.

Branka, V., 2003. Space-time Coding, John Wiley and Sons. Ltd.

Erik, G., Larson and P. Stoica, 2003. Space-time block coding for wireless communications, Cambridge University Press.

Lee, I., A. Chan and C.-E.W. Sundberg, 2003. Space-Time Bit-Interleaved Coded Modulation for OFDM systems in Wireless LAN Applications, In: Proc. ICC., pp: 3413-3417.

Vahid, T., H. Jafarkhani and A.R. Calderbank, 1999. Space-time block coding for wireless communications: Performance results. IEEE. Transaction Inform. Theory, Vol. 17.