Journal of Engineering and Applied Sciences 3 (4): 357-362, 2008
ISSN: 1816-949X
© Medwell Journals, 2008

# Optimization of the Performance of a Super-Cruise Engine with Isothermal Combustion Inside the Turbine Using Exergy Method

A.S. Adavbiele and S.O. Amiebenomon
Department of Mechanical Engineering, Ambrose Alli University, P.M.B. 14, Ekpoma Nigeria

**Abstract:** The performance increase of a turbofan engine through the use of isothermal combustion inside the high-pressure turbine (High-Pressure Turburner, HPTB) is currently being investigated as an alternative form of thrust augmentation on the best propulsion system for a next-generation supersonic cruising (Mach 2 to Mach 4) aircraft. It is evident that not all energy is available to do work. Therefore, a cycle analysis using the conventional performance criteria such as work ratio, specific fuel consumption and efficiency will only reveal the system performance. In order to include the effects of the surrounding and level of imperfection in flow processes; this study was focused on the investigation of the performance optimization of the super-cruise engine using exergy method. By carrying out the energy balance of the first law and the concepts of reversible process and available energy, which are basic to application of the second law, from the energy utilization diagram, significant and unexpected imperfection on the flow processes were calculated, which allow improvements on the system performance to be suggested. It was shown that in the specific plant analyzed improving the turbine flow process yielded a considerable exergy saving.

**Key words:** Turburner engine system, exergy analysis, HPTB, isothermal combustion

## INTRODUCTION

Current thinking on the best propulsion system for a next-generation supersonic cruising (Mach 2 to Mach 4) aircraft is a mixed-flow turbofan engine system with afterburner (Chiu, 2004). The performance increase of a turbofan engine through the use of isothermal combustion inside the high-pressure turbine (High-Pressure Turburner, HPTB) as an alternative form of thrust augmentation has been investigated and an engine with HPTB provides significant benefit both at the design point and in the off-design regimes, allowing smaller and more efficient engines for supersonic aircraft to be realized (Chiu, 2004). It is quite obvious that a turbine with proper amount of heat addition (through combustion) could create an isothermal process and maximize the cycle performance. To maximize the work output, the heat addition should take place at the highest allowable temperature while the heat removal should be done at the lowest allowable temperature for any thermodynamic cycle. However, heat addition inevitably leads to temperature increase, so either work extraction is needed to maintain the temperature or the cycle has to start the heat addition process at a lower temperature.

Prior analyses on this type of engine have focused only on energy analysis. In an energy analysis, based on the first law of thermodynamics, all forms of energy are considered to be equivalent. The loss of quality of energy is not taken into account; for example, the change of the quality of thermal energy as it is transferred from a higher to a lower temperature cannot be demonstrated in an energy analysis. It shows the energy flow to be continuous. Whereas, an exergy analysis, based on the first and second law of thermodynamics, pinpoints and quantifies the irreversibilities and shows the degree of the thermodynamic imperfection of processes that occur within the system and all kinds of interaction between energy and material flows outside the system's boundaries. Exergy, also known as availability, is a measure of the maximum useful work or work potential that can be obtained when a system is brought to a state of equilibrium with the environment in reversible processes. As a result of this interaction, exergy relates both the system and surrounding.

The term exergy, based on the first and second law of thermodynamics, was introduced by Rant in the fifties of the last century (Chiu, 2004; Wepfer, 1979). The explicit use of exergy analysis for the assessment of different

**Corresponding Author:** A.S. Adavbiele, Department of Mechanical Engineering, Ambrose Alli University, P.M.B. 14, Ekpoma, Nigeria

types of systems has been developed quite slowly (Kotas, 1995; Finnveden and Östlund, 1997; Cornelissen, 1997). Nowadays, there are still a few researchers and engineers, who use exergy analysis; however, this study is focused on the application of the combined 2 laws, which is described in the concept of exergy analysis, to suggest possible improvements and to optimize the performance of a typical turbuner engine system.

**Method of analysis:** New methods of exergy analysis have been introduced recently; such as graphic exergy analysis with the use of the energy-utilization diagram and the exergy flows through the system using Grassmann diagrams (Ishida *et al*., 1987; Ishida and Zheng, 1986). Only the graphic exergy analysis was used in this work. To perform an exergy analysis, first, material and energy balances were made. The following three ways of exergy transfer were distinguished in this thesis: exergy transfer with work and with heat interaction and exergy associated with mass flow.

Other components of exergy transfer were neglected, like potential and kinetic energy or excluded, like nuclear effects. Other assumptions made were as follow:

- Only chemical exergy is used for fuel.
- Both physical and chemical exergy is used for the turburner.

The work potential was obtained by reversible processes, though in reality there are only irreversible processes. For practical reasons a reference environment was defined. The reference environment was considered to be so large, that its parameters were not affected by interaction with the system under consideration. In this presentation, the reference environment has a reference temperature, $T_0$ of 298.15 K and a reference pressure, $P_0$ of 1 atmosphere.

Applying energy-utilization diagrams in the present method, it was assumed that a system is composed of a number of subsystems containing energy-donating and energy-accepting processes. Consider the processes in the system. The first law of thermodynamics states that the total energy is conserved (Ishida and Zheng, 1986; Wall, 1986) so that:

$$E)\, H_k = 0 \ (k = 1, \text{-----}k) \tag{1}$$

where, k^ is the number of processes in the subsystem and H is the enthalpy. Classified into energy donors and energy acceptors, the above equation becomes

$$E)\, H_k^{ed} + 3)\, H_k^{ea} = 0 \tag{2}$$

where the superscript ed and ea mean energy donor and energy acceptor, respectively. The work done in a process is:

$$W_{ma} = h_1 - h_2 = c_p\,(T_1 - T_2) \tag{3}$$

The second law of thermodynamics states that the total entropy is increased:

$$E)\, s_k = E)\, S_k^{ed} + E)\, S_k^{ea} \$ 0 \tag{4}$$

h represents specific enthalpy, s entropy and u, internal energy embedded in the material.

Then exergy loss ($b_1$-$b_o$) for steady flow system in the process system is (Rogers and Mayhew, 1992):

$$Ew_{max} = E)\, H_k - T_0 E)\, S_k = -T_0 E)\, S_k \# 0 \tag{5a}$$

$$c_p\left(T_1 - T_o\right) - c_p T_o \ln\frac{T_1}{T_o} + RT_o \ln\frac{p_1}{p_o} \tag{5b}$$

Introducing the exergy factor A, this is given as

$$A = w_{max}/)\, H \tag{6}$$

Equation (5) may be converted to:

$$-\sum \Delta E_k = \sum \Delta H_y^{ea}\left(A_y^{ed} - A_k^{ea}\right) \tag{7}$$

When k^ goes to infinity the relation becomes:

$$-f\, dw_{max} = f(A^{ed} - A^{ea})\, dH^{ea.} \tag{8}$$

Hence, by plotting $A^{ed}$ and $A^{ea}$ against $H^{ea}$, the exergy loss in each process is represented by the area between $A^{ed}$ and $A^{ea}$ in what is known as energy-utilization diagrams.

Instead of comparing a process to some imaginary ideal process, as was done in the case of isentropic efficiency for instance, it is better measure of the usefulness of the process to compare the useful output of the process with the loss exergy of the system Eq. (9). The useful output of a system is given by the increase of energy of the surroundings, known as effectiveness, which for compression or heating process is:

$$\varepsilon = \frac{\text{Increase of exergy of the system}}{\text{Loss of exergy of the surroundings}}$$

Effectiveness (g)

$$\varepsilon = \frac{h_1 - h_2}{b_1 - b_2} = \frac{dh}{db} \tag{9}$$

Effectiveness was used to compare the performance of different types of the engine processes with different outputs and in selecting the one with the least exergy destruction. Exergetic efficiency was used to compare the degree of thermodynamic perfection of different processes in the engine.

In addition to the calculation of exergetic efficiencies of the engine and its components, it was generally helpful and instructive to calculate the irreversibility, I as:

$$I = (b_1\text{-}b_2)\text{-}(h_1\text{-}h_2) \tag{10}$$

Isentropic efficiency

$$\eta_{is} = \frac{h_1 - h_2}{(b_1 - b_2) + (h_1 - h_2)} \tag{11}$$

The possible work of a heat engine (loss of exergy of surroundings), given by Carnot cycle thermal efficiency is:

$$W_{max} = (h_1 - h_2)(1 - \frac{T_o}{T_{max}}) \tag{12}$$

$$\text{so that } \varepsilon = \frac{b_2 - b_1}{W_{max}} \tag{13a}$$

However, for the fan, which operates at a temperature lower than the reference conditions, g was given as:

$$\varepsilon = \frac{dh}{db} \tag{13b}$$

Ideal gas analytical models were made. These models gave insight in the structure of the performance maps generated with the process calculation. Operating parameters used are: the pressures (between 0.02 and $10\times10^5$ Pascal); the fan inlet temperature is 216.7K and combustor outlet temperature, 1273K. The different components of the turburner engine system as depicted in Fig. 1, namely a fan, 0-1, compressor, 1-2, combustor, 2-3, turburner, 3-4 and a nozzle, 4-5 were then considered and values obtained for them presented in tables.

To allow a comparison to be made, the analysis was performed considering the various processes with and without a turburner in the engine system. As all other features of the turbine were the same, only the specific work done by the turbine and nozzle was calculated separately.

It was assumed that the life of the deep cycle battery will be 12 years. The average lifespan of the fluorescent lamp is about 10,000 h, which is about five years of life. The lifespan of a quality LEDs ranges from 50 -100,000 h, so if used 8 h a day, a LED would not have to be replaced at all during a 16 year analysis period and could indeed function for several decades. Thus no LED replacements were considered for the 16 year life cycle cost (LCC) analysis period.

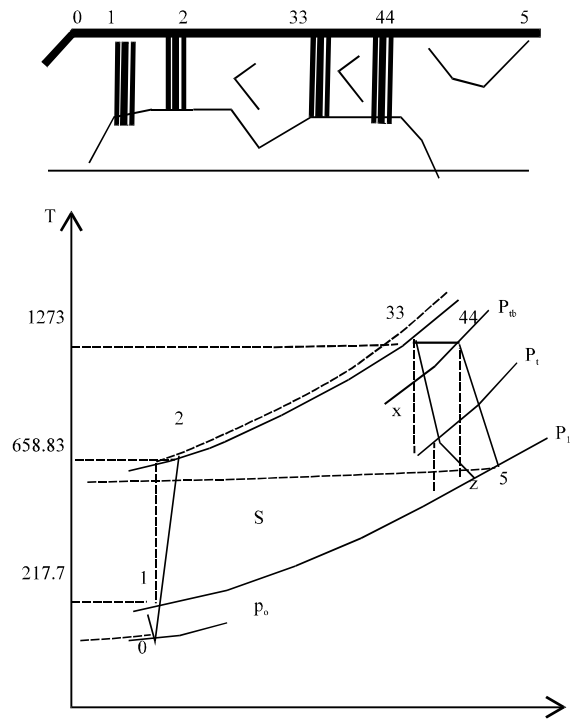


Fig. 1: Turburner engine system

## RESULTS AND DISCUSSION

Application of Eq. (3) or (12) yielded the result presented in Table 1. The data immediately below the table consist of values obtained with the ordinary turbine without incorporation of a burner. Evaluation of the exergy in the engine yielded the results as in Table 2. Subsequently, with the values obtained for dh in Table 1 and db in Table 2, effectiveness was calculated and presented in Table 3. Figure 2 and 3 show the plots obtained with the values in Table 3. the performance map was then presented in Fig. 4. The goal was to have a gas turbine, which has both a high efficiency and a high (dimensionless) specific work output.

Figure 2 represented the energy-utilization diagram obtained for the engine. This diagram showed the scheme of energy transformations by plotting the amount of energy transformed on the abscissa (i.e., coordinate for the first law of thermodynamics) and the energy levels of

Table 1: Maximum Work done in a turburner engine system

| Components | T | $c_p$ | dh |
|---|---|---|---|
| Fan | 216.70 | 1.01 | 82.26 |
| Compressor | 658.83 | 1.01 | 446.55 |
| Combustor | 1273.0 | 1.11 | 681.73 |
| *Turburner | 1273.0 | 1.11 | 446.55 |
| **Nozzle | 418.70 | 1.11 | 948.27 |
| *Turbine | 1070.5 | 1.11 | 723.50 |
| **Nozzle | 270.55 | 1.11 | 887.89 |

Table 2: Exergy content in a turburner engine system

| $p_o$ | $T_o$ | T | $c_p$ | p | R | db |
|---|---|---|---|---|---|---|
| 1 | 298.15 | 216.70 | 1.01 | 0.02 | 287 | 334.73 |
| 1 | 298.15 | 658.83 | 1.01 | 10 | 287 | 197.159 |
| 1 | 298.15 | 1273.0 | 1.11 | 10 | 277.3 | 190.97 |
| 1 | 298.15 | 1273.0 | 1.11 | 9.5 | 277.3 | 186.73 |
| 1 | 298.15 | 418.70 | 1.11 | 0.02 | 277.3 | 323.41 |
| *1 | 298.15 | 1070.5 | 1.11 | 5 | 277.3 | 133.50 |
| **1 | 298.15 | 270.6 | 1.11 | 0.02 | 277.3 | 323.43 |

Table 3: Turburner Engine System Effectiveness

| Component | dh | $db=h-T_0s$ | $g = db/dh$ |
|---|---|---|---|
| Fan | 82.26 | 334.734 | 0.246 |
| Compressor | 446.55 | 197.1549 | 0.750 |
| Combustor | 681.73 | 190.9725 | 0.289 |
| *Turburner | 446.55 | 186.7317 | 0.428 |
| **Nozzle | 948.27 | 323.413 | 0.197 |
| *Turbine | 723.50 | 133.50 | 0.447 |
| **Nozzle | 887.89 | 323.43 | 0.150 |

the donor process ($A^{ed}$) and the acceptor process ($A^{ea}$) on the ordinate (i.e., coordinate for the second law). It was found that there are pinches at several points. Hence, it is not so easy to operate the system and much attention should be paid especially to these pinches. However, when this is solved, the uniform distribution of exergy loss shows that this system is well optimized. The diagram is divided into different parts related to the components of the turburner engine system. This figure clearly shows whether the quality of the energy, i.e., exergy, supplied is sufficient and the level of excess. The total exergy loss in each subsystem is shown as the area between the energy donating and energy accepting lines (The shadowed area). In the turburner, exergy from the exhaust gases, the energy donating line is straight and the area is least compared to the areas of the other components, where we can see the part indicating isothermal of the energy accepting line. For the turbine, gas expansion is the energy donor and its energy level becomes greater than unity, while a work sink with A = 1 is the energy acceptor. The area between these 2 energy levels gives the exergy loss in the turbine and the work generated is obtained as the width of $)H^{ea}$. The remaining part of the diagram shows the heat exchange in the remaining subsystems indicating a very well optimized system.

As can be seen in Fig. 3 and 4, introducing a turbuner deteriorates exergy efficiency in the gas turbine. A remarkable difference can be seen between energy and exergy efficiencies and even an opposite trend wa

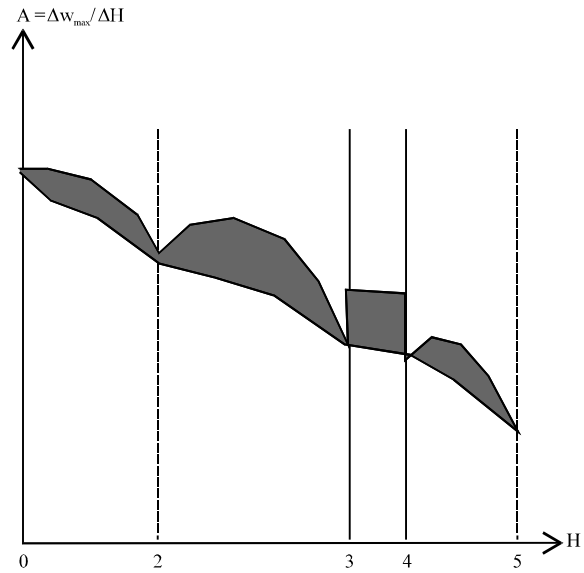


Fig. 2: Energy-utilization diagram

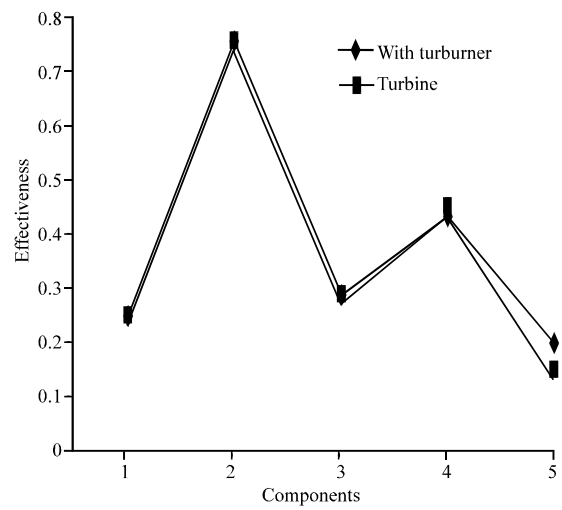


Fig. 3: Comparison of the effectiveness with and without a turbuner in a gas turbine engine system

observed in Fig. 4: while exergy efficiency rises for the engine with a turburner, exergy efficiency decreases with the engine without a turburner. This may not be so clear using energy analysis and it suggests the general use of the exergy criterion for assessing the imperfection in the engine. This method has demonstrated the apparent benefits of the gas turbine with a turbuner. This scheme presented in Fig. 2 shows the imperfections in the various engine components.

From the performance map in Fig. 4, it can be concluded that within the working parameters considered

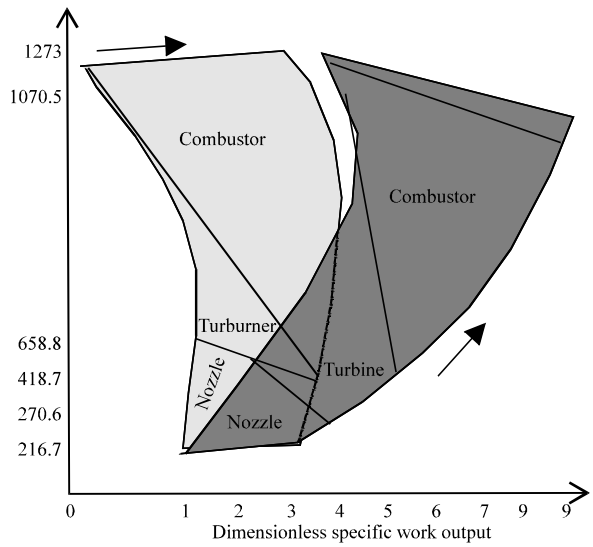


Fig. 4: Performance map of the turbine with and without a turburner

in this study, the highest thermal efficiency is achieved by the turburner cycle. The cycle with turburnert also has the highest specific work. Thus it can be concluded that the cycle with turburner has pronounced benefits over the one without a turburner.

Effectiveness (Fig. 1 and 2) was found to be greater than the isentropic efficiency for the nozzle because the gas at state 5 has higher exergy than that at state z due to the heating effect of the irreversibilities in the expansion process. On the other hand, the value for the compressor was less than the isentropic efficiency because the gas at state 1 has higher exergy than that at state 4 due to the compression effect of the irreversibilities in the compression process. Large temperature in the combustor resulted in very low value of effectiveness (Fig. 2), whereas the value is very high for the turbuner because the temperature remains constant.

## CONCLUSION

This method has demonstrated the apparent benefits of the gas turbine with a turbuner. The characteristic of energy transformations in the turbuner engine system has been clarified through the use of energy-utilization diagram, which shows that the system is very well optimized. It is also found that the method of energy-utilization diagrams effectively illustrates the internal phenomena by showing the distribution of exergy losses for each energy transformation. The exergy loss in the nozzle is the highest while the exergy loss in the turbuner is the lowest among all processes but from the diagram we also see that to suggest improvements further studies are needed.

The performance of the cycle processes in the engine has been assessed. To account for the advantage of Turburner in the engine, additional exergy calculations have been performed for the processes of the engine without a burner. The exergy analysis has also been performed to gain a better understanding of the cycles under consideration and to evaluate the effects of having a turburner in the system.

The advantage of this study is the use of “exergy” analysis as a tool for pinpointing inefficiencies. Energy and exergy analysis of the turbuner engine system has revealed a number of areas where research and development could have an impact on reducing losses and recovering energy sources.

**Nomenclature:**

| | | |
|---|---|---|
| E | : | Summation. |
| g | : | Effectiveness. |
| $O_{is}$ | : | Isentropic efficiency. |
| Oth | : | Isentropic efficiency. |
| A | : | Exergy factor. |
| b | : | Specific exergy. |
| $c_p$ | : | Specific heat at constant pressure. |
| d, ) | : | Change. |
| ea | : | Energy acceptor. |
| ed | : | Energy donor. |
| h, H | : | Specific enthalpy, enthalpy. |
| I | : | Irreversibility. |
| p | : | Pressure. |
| $p_o$ | : | Reference pressure. |
| R | : | Gas constant. |
| s, S | : | Specific entropy, entropy. |
| T | : | Temperature. |
| $T_o$ | : | Reference temperature. |
| U | : | Internal energy. |
| w | : | Specific work. |
| $W_{max}$ | : | Specific maximum work. |

## REFERENCES

Chiu, Y.M., 2004. A performance study of a super-cruise engine with isothermal combustion inside the turbine. Ph.D Dissertation submitted to the Faculty of the Virginia Polytechnic Institute and State University, New York.

Cornelissen, R.L., 1997. Thermodynamics and sustainable development: The use of exergy analysis and the reduction of irreversibility. Ph.D Thesis, University of Twente, Netherlands.

Finnveden, G. and P. Östlund, 1997 Exergies of natural resources in life-cycle assessment and other applications. Energy, 22 (9): 923-931.

Ishida, M. and D. Zheng, 1986. Graphic exergy analysis of chemical process systems by a graphic simulator. GSCHEMER, Comput. Chem. Eng., 10 (6): 525-532.

Ishida, M., D. Zheng and T. Akehata, 1987. Evaluation of chemical-looping combustion power-generation system by graphic exergy analysis. Energy, 12 (2): 147-154.

Kotas, T., 1995. The exergy method of thermal plant analysis, Krieger Publishing Co, Malabar, Florida.

Rogers, G.F.C. and Y.R. Mayhew, 1992. Engineering Thermodynamics, Work and Heat Transfer. 4th Edn. Longman, London, pp: 117-122.

Wall, G., 1986. Exergy-A Useful Concept, Ph.D. Thesis, Chalmers University of Technology, Sweden.

Wepfer, W., 1979. Application of the second law to the analysis and design of energy systems. PhD. Thesis, University of Wisconsin, Madison, WI.