Research Journal of Applied Sciences 12 (1): 78-89, 2017
ISSN: 1815-932X
© Medwell Journals, 2017

Investigation on Power Conditioning Electronic Interface Circuit for Piezoelectric Vibration Based Energy Harvesting System

[1, 2]Shafii A. Wahab, [1, 3]Shabiul Islam, [4]M.S. Bhuyan, [1]S. Jahariah and [2]Sawal H. Md Ali
[1]Institute of Microengineering and Nanoelectronics (IMEN),
Universiti Kebangsaan Malaysia (UKM), 43600 UKM Bangi, Selangor, Malaysia
[2]Department of Electrical, Electronic and Systems Engineering,
Faculty of Engineering and Built Environment, 43600 UKM Bangi, Selangor, Malaysia
[3]Faculty of Engineering, Multimedia University, 63100 Cyberjaya, Selangor, Malaysia
[4]Department of Computer Science and Engineering,
Stamford University Bangladesh, Dhaka-1217, Bangladesh

Abstract: The development of wireless sensor network has been driven by recent new advance technologies in low-power energy integrated micro devices. The scattered nature of the sensor topologies requires its own power but the main obstacle to the battery power operation is limited resources. As a result, it must be replaced when it is exhausted. Moreover, it is difficult if the sensor is embedded in a particular object and its environment are harmful for the battery replacement and also require higher cost. To overcome the problem, natural resources known as wind energy, vibration, temperature and solar, etc., can be considered as input sources. However, vibration is the best energy source because it can be found anywhere and according to the use of piezoelectric materials that have the ability to convert mechanical energy into electrical energy. The proposed research work on power conditioning circuit will be investigated, modelled and designed using synchronized switch harvesting on inductortechnique from piezoelectric vibration. In this regards, the power conditioning circuitenergy harvester can generate more energy and then stores the generated power into large reservoir capacitance, followed by combination of a charge pump-type circuit and etc. The development of the power conditioning circuit energy harvester will be modelled and simulated using PSPICE Software. Later on, the power conditioning circuit harvester will be implemented into printed circuit board layout. Finally, the comparison will be given by the power conditioning circuit performance between the simulated results in PSPICE and the validated hardware implementation into printed circuit board layout. The developed power conditioning circuit harvester can be used to replace the external battery for powering-up the low-power micro devices.

Key words: Nature, resources, battery, switch, harvester

INTRODUCTION

Energy Harvesting (EH) relates to the practice of harvesting small amounts of energy from ambient environmental sources (examples: solar, wind, water, heat and vibration, etc.,) in order to power either miniaturized Ultra-Low-Power (ULP) electronic devices directly or charge a rechargeable battery or capacitor (Jalil and Sampe, 2013; Bhuyan *et al*., 2013a-d). In general, energy harvesting system consists of three main blocks: the harvesting device (energy transducer), the harvesting circuitry and the application system (load) is shown in Fig. 1 (Mi *et al*., 2013).

Most of the research works on the energy harvesting device have been carried out in the last two decades with the prime objective of a built-in energy harvesting system in various electronic applications, for example, Wireless

Fig. 1: Basic block diagram of an energy harvesting system

Sensor Network (WSN) nodes (Galchev, 2010; Bhuyan *et al*., 2013c). Typical WSN is comprised of thousands or even hundreds of thousands nodes which collect and transmit desired data to either a central collection point or a neighboring node (Bhuyan *et al*., 2013b). Current designs of WSN nodes consist of a sensor or actuator (or combination of the two), a micro processing unit for collecting and manipulating data and a radio transceiver for receiving and sending the collected data. These devices derive their value from their

Corresponding Author: Shafii A. Wahab, Institute of Microengineering and Nanoelectronics (IMEN), Universiti Kebangsaan Malaysia (UKM), 43600 UKM Bangi, Selangor, Malaysia

distribution; their ability to be implemented in various locations that are random and probably most difficult to access and being relatively mobile (Bhuyan *et al*., 2013a). Such, devices operate in a pulse power fashion with an X% duty cycle, spending (100-X)% of their lifetime in a sleep state where their power consumption is at a bare minimum and only waking to a peak consumption state to take measurements or transmit and receive data. To power up WSN nodes, the obvious solution would be to supply the WSN node with power via wire from a designated power supply. However, it immediately undermines the value of such devices being random and mobile in distribution and implementation. The next logical choice could be a battery. However, this choice is also not the optimal one. If a node has an average power consumption of 100 μW and is powered by a 1 cm^3 lithium battery containing about 2,880 J energy, then the life expectancy of the design would be less than a year. The cost and time spent replacing the batteries in a few devices of a small WSN network every year would be acceptable. However, the task of replacing thousands or hundreds of thousand batteries annually in nodes that are wide spread and in difficult to access locations is neither practical nor desirable. Other less common power supplies such as micro-fuel cells, micro-heat engines and even radio active power sources are being considered for implementation, however all are still in a development phase and not readily available. It occurs that the development of a suitable power supply (the amount of power that can be delivered) is the major factor hindering the final development and deployment of WSN into the industries that await their advent.

Energy harvester device optimization is one way in which the power density of a harvesting device can be significantly improved. Another way in which the power output can be enhanced through the use of the harvesting circuitry that is usually connected to the output of the harvesting device to condition and/or manage the electrical power output. Numerous studies have shown that power densities of energy harvesting devices can be hundreds of μW, however, literature also reveals that the power requirements of many electronic devices are in the mW range. Therefore, a key challenge for the successful deployment of energy harvesting technology remains in many cases, the provision of adequate power (Table 1).

In piezoelectric vibration based energy harvesting system, as shown in Fig. 2, the piezoelectric material (element) and the host structure (mechanical) provides energy in the form of a charge separation (i.e., charged capacitor). The oscillation of the beam means that the voltage developed on the piezoelectric capacitor contains purely AC components and the AC voltage amplitude depends on the piezoelectric material characteristics, dimensions and varies with source vibrations. The source vibrations which result from ambient environments, may also vary in more or less important proportions. The need for an electronic interface comes from the fact that the electronic loads and the components which are being used for harvested energy storage, require low power DC voltage. Thus, the electronic interfaces which are connected between the piezoelectric electrodes and the electronic load, ensure the voltage compatibility between the electric load and piezoelectric element. Moreover, the interface circuit can perform additional functionalities like accurate voltage regulation for precision devices like microcontrollers.

Table 1: Power requirements of a range of modern electronic devices and systems

Devices	Power consumption
PALM, MP3 (Harrop and Das, 2010)	100 mW
Bluetooth Transceiver (Harrop and Das, 2010)	45 mW
Nodes in the Robomote test bed of USC Robotic's test bed network (Rahimi *et al*., 2003)	36.4 mW
Berkeley's Telos Mote (Jiang *et al*., 2005)	36 mW
An autonomous sensor module given in Ferrari *et al*. (2009)	20 mW
A bulk acoustic wave-based transceiver for a tire pressure monitoring sensor node (Flatscher *et al*., 2010)	18.6 mW
A custom designed radio operating at 1.9 GHz with a range of 10 m (Roundy and Wright, 2004)	12 mW
Potential requirements of a wireless sensor network operating Zigbee circuits (Ke *et al*., 2009)	10 mW
A transmitter (model RFM HX1003) working at 418 MHz with a range of 50ft (Paradiso and Feldmeier, 2001a, b)	7.5 mW
Accelerometer, model ADXL103 supplied from 5 V (Analog Devices) (Maqsud *et al*., 2005)	3.35 mW
An Ultra-Wide-Band (UWB) transmitter designed in 0.18 m CMOS for body area networks (Ryckaert *et al*., 2005)	2 mW
The Sunflower miniature computing system (Stanley-Marbell and Marculescu, 2007)	1.75 mW
Automotive light sensor, model SFH 5711 supplied from 2.5V (OSRAM) (Bechtel *et al*., 2004)	1.03 mW
Hearing aid (Raju and Grazier, 2010)	1 mW
Short range (~30 mm) proximity sensor, model SFH 7741 (OSRAM) (Konolige *et al*., 2008)	270 W
Hearing aid (Vullers *et al*., 2009)	100 uW
RFID Tag/Implanted medical device (Raju and Grazier, 2010)	10 uW
Electronic watch or calculator (Harrop and Das, 2010)	1 uW
The 32 kHz quartz oscillator (Harrop and Das, 2010)	100 nW

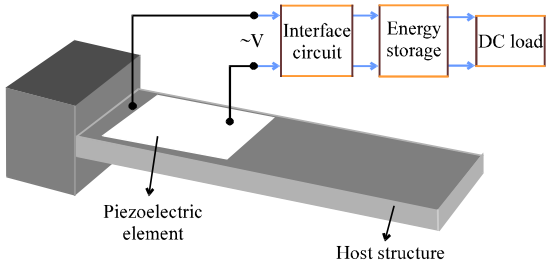

Fig. 2: Configuration of piezoelectric energy harvester

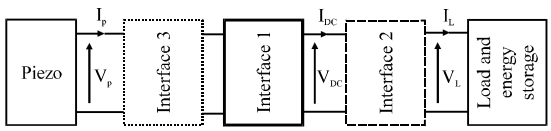

Fig. 3: Power interfaces

One-stage electronic interface involves one interface only, namely as Interface 1 as shown in Fig. 3. Optimization of the power flow requires an adaptation of the rectified voltage, respectively with the mechanical displacement magnitude. This function can be achieved adding second interface namely as Interface 2 which can be implemented using a DC/DC converter. The two-stage power interface is typically composed of the Interfaces 1 and 2. An additional interface, namely as Interface 3 can be used for increasing the power produced by the piezoelectric element by performing an original non-linear treatment on the piezoelectric element voltage. The three-stage power interface, thus includes Interfaces 1-3 are shown in Fig. 3.

Objectives:

- To investigate the power conditioning electronic interfacecircuit, piezoelectric transducer devices and power storage methods for micro energy harvesting device from literature survey
- To design and simulate the suitable power conditioning electronic interfacecircuitin PSPICE simulation using SSHI technique from piezoelectric vibration
- To implement and validate the investigated power conditioning electronic interfacecircuitsinto Printed Circuit Board (PCB) for vibration based energy harvesting system

Literature review: A number of circuit techniques have been investigated to enhance the power output of a piezoelectric energy harvesting devices. These include impedance adaptation methods and synchronous techniques. The principle of impedance adaptation is to provide a method by which the electrical load impedance can be matched to the source impedance of the piezoelectric energy harvester as from impedance matching theory these are the conditions under which maximum energy harvesting occurs. In synchronized techniques, extraction of the charge produced by the piezoelectric element and the input vibrations are synchronized. The first synchronized technique to make an appearance was the Synchronised Switch Harvesting on Inductor (SSHI) technique (Badel *et al*., 2006). The second technique, Synchronous Electric Charge Extraction (SECE) (Lefeuvre *et al*., 2005a, b). The most efficient switching techniques can be classified into two groups according to the placement between the full-wave bridge rectifier and the switches. The first group of the switching circuits places the switches before the full-wave bridge rectifier and the second group places the switches after the full-wave bridge rectifier. To limit the scope of this literature review only studies that directly concentrate on improving the output power of piezoelectric energy harvester by some means are considered. This review mainly focuses on the circuit functionality.

By way of introduction, the simplest load that can extract real power from the piezoelectric energy harvesting is a resistive load as shown in Fig. 4. The piezo electric energy harvester connected to a purely resistive load known as the standard AC approach. This circuit configuration can provide maximum power output at the optimal load resistance only (Le, 2008).

To drive a low-power DC load from a piezoelectric energy harvesting the interface circuit configuration can be a half wave or full wave bridge rectifier with a smoothing capacitor known as the standard DC approach is shown in Fig. 5 (Szarka *et al*., 2012). The standard interface circuit is fully passive, that is, it does not need any control and therefore it is easier to implement and as a result is considered to be more reliable compared to non-passive interfaces. However, variations of the piezoelectric voltage amplitude at the AC side of a rectifier while the DC side voltage is retained fixed can significantly reduce the amount of extracting power from a piezoelectric element.

Lesieutre *et al*. (2004) showed when the piezoelectric device connected to the electrical load, the electrical load absorbs energy from piezoelectric and increase the damping factor of the piezoelectric device. Ottman *et al*. (2003) explore the method of interfacing to vibration-based piezoelectric generator with a matched impedance load through the use of a DC-DCconverter as shown in Fig. 6. Their target application was charging of

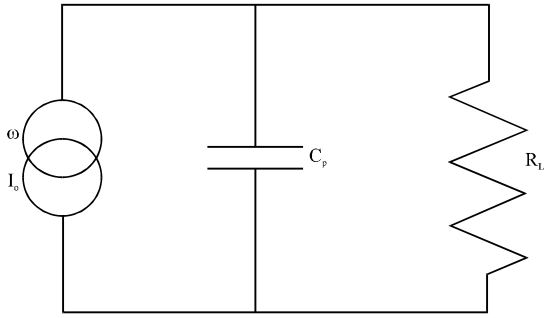

Fig. 4: Schematic diagram of piezoelectric energy harvesting device with resistor load

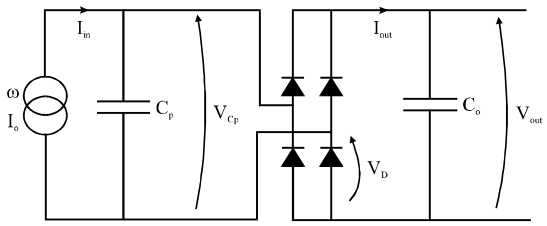

Fig. 5: Schematic diagram of piezoelectric energy harvesting device with full-bridge rectifier (smoothing and resistor load)

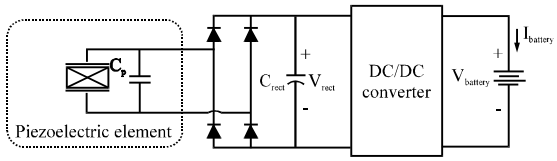

Fig. 6: Adaptive energy harvesting circuit

an electrochemical battery (with a given battery voltage that is essentially constant). It is noted that, the principle of impedance adaptation is to provide a method by which the electrical load impedance can be matched to the source impedance of the piezoelectric generator for maximum power transfer occurs. It was shown through analytical analysis that the peak output power occurs when the voltage across the smoothing capacitor is equal to one-half the peak open-circuit voltage of the harvesting device. The output of the DC-DC converter used to implement the adaptive impedance interface in terms of voltage is held at 3 V in by a battery. By maximizing the current flow into the battery, they maximized the power output by sensing the current flowing into the battery, $I_{battery}$ and adjusting the duty cycle of the DC/DC converter accordingly (through means of a control circuit). However, if the load to be powered is not a battery, it might be the case that since current flow to the application is the metric that is used to alter the duty cycle of the DC-DC converter, the voltage at the output of the converter might fluctuate somewhat, potentially causing problems for the application system. Thus, the matching electric circuit cannot be adapted with the variations of environmental vibrations. Nevertheless, their strategy has been then to always maintain this optimal rectifier output voltage regardless of any changes in the characteristics of the vibration exciting the harvesting device. Later, in another research (Ottman *et al*., 2003) found that as the magnitude of the mechanical excitation to the energy harvesting device increased, the optimal DC/DC converter duty cycle became essentially constant, therefore the control of the converter was greatly simplified from its initial incarnation given by Ottman *et al*. (2007).

To enhance the extracted power, researchers used complex electronic interface such as a microprocessor and an Analog-to-Digital (A/D) converter is shown in Fig. 7. Mainly, focused on improving the extracted power using a non-adaptive circuits or reducing the power loss in rectifying diodes (Han *et al*., 2004; Le *et al*., 2006; Lefeuvre *et al*., 2006, 2007). However, the requirement of external sensing feedback such as a current sensor (Ammar *et al*., 2005) or a displacement sensor, e.g., extra built-in electrodes on the piezoelectric beam (Lefeuvre *et al*., 2006), increases the circuit dissipations and complexity and dramatically reduces the efficiency of the energy harvester especially at low power; less than a few milliwatts.

A stand-alone energy-harvesting circuit consists of a Voltage Doubler (VD) rectifier, a step-down converter and a single-chip analog controller was presented (Tabesh and Frechette, 2010) shown in Fig. 8. The VD rectifier was able to extract maximum power at a lower current (therefore less power dissipations in diodes), thus suitable for low power (0.5-5 mW) applications. The total power consumption of the controller unit is <0.05 mW and the overall efficiency of the circuit prototype reached 60%. The circuit improves the amount of extracting power from a piezoelectric generator independent of its operating frequency, vibration amplitude and its geometry (capacitance). This feature of the circuit is of utmost importance for adaptive energy-harvesting devices that tune their resonant frequency to track the source vibrations. However, the limitations of the proposed energy-harvesting circuit were for a power range <0.5 mW, the circuit is not efficient mainly due to the control circuit's power loss and the VD rectifier of the circuit requires a filter capacitor with higher voltage level compared to a full-bridge rectifier.

Based on the circuits mentioned above, maximum power can be extracted from the piezoelectric harvester if

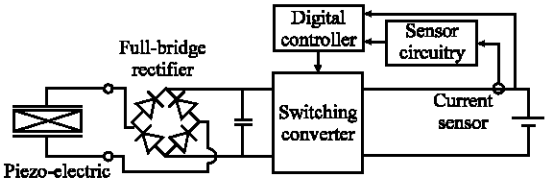

Fig. 7: Full bridge adaptive energy harvester circuit using output current as a feedback

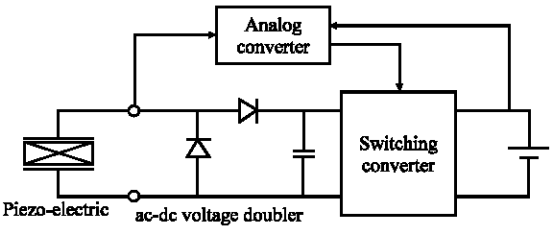

Fig. 8: Voltage Doubler based stand-alone circuits using piezoelectric voltage as a feedback

the power conversion and the load circuits present a conjugate impedance match to the harvester. Since, the piezoelectric element has large clamped capacitance an impedance matching circuit is always required to maximize the generated power. An inductor could be a choice to compensate the piezoelectric clamped capacitor but it cannot be adaptive to the exciting frequency environmental variations (cannot be always at one constant value). However, this is an unrealistic option due to very large inductor values requirement. For example, with a typical vibration frequency of 100 Hz and a piezoelectric capacitance of 100 nF, the required resonant inductor would be about 25 H. The value of the inductance will become larger in lower frequency range. To overcome this drawback, switching-type charging circuits were proposed leading to the concept of SSHI (Lefeuvre *et al*., 2004). In switching circuits, the switches are operated synchronously with the vibration of the host structure in order to optimize the power flow in a non-linear manner such as to take advantage of the mechanical position (displacement) of the generator in order to boost the power output of the device. The technique requires a bi-directional switch Q and an inductor L are added in series or in parallel to the piezoelectric element as shown in Fig. 9. While, the parallel-SSHI circuit maintains the generator connected to the reservoir capacitor via the rectifier block, the series-SSHI remains in open circuit for most of the cycle, thus allowing the voltage to rise above the reservoir capacitor voltage. In the practical implementation of these circuits, the voltage inversion and therefore the maximum power yield of the generator is limited by the series resistance of the inductor and the voltage drops across the switching devices.

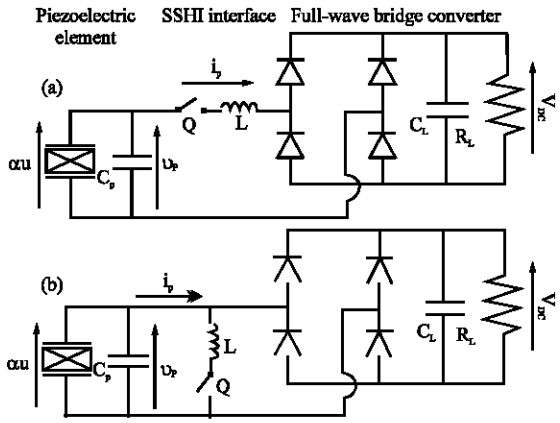

Fig. 9: Charging circuits for the DC case: a) series-SSHI and b) parallel-SSHI

At most of the time, the switch Q is in the open circuit state. When the local extreme displacements or zero vibration velocities occur, the switch is conducted in a very short period. In this short period, the clamped capacitor C_p makes the resonance with the inductor L and the piezoelectric voltage v_p inverses. Accordingly, the SSHI circuit increases the magnitude of the piezoelectric voltage and puts piezoelectric voltage v_p in phase with the vibration velocity which indicates that more energy is extracted from the vibration source (Lallart *et al*., 2011). Guyomar *et al*. (2005) through experiments found power increase using the SSHI technique was >900% in the DC case and around 380% for the AC case. Component-wise, the technique appears to be very simple as only an inductor and switch are needed. However, in order to operate the switch at the correct times that is, whenever a displacement extreme occurs, 'peak' and 'trough' detection circuitry needs to be developed in addition to switch driving circuitry. The optimal load value of parallel-SSHI (around mega ohms) is higher than that of series-SSHI (around hundred ohms) (Lefeuvre *et al*., 2005a, b).

In other research, Garbuio *et al*. (2009), the series-SSHI harvesting approach was obtained by replacing the switching inductance by a transformer which actually allowed an artificial change in the load by the piezoelectric element (by a factor 1 m^{-2} with m being the transformer ratio). This approach, called Synchronized Switch Harvesting on Inductor using Magnetic Rectifier (SSHI-MR), allows dividing by m, the voltage gap of discrete components (such as diodes) by the piezoelectric element and is therefore suitable for energy harvesting from low output voltage levels. The schematic of the SSHI-MR approach is shown in Fig. 10.

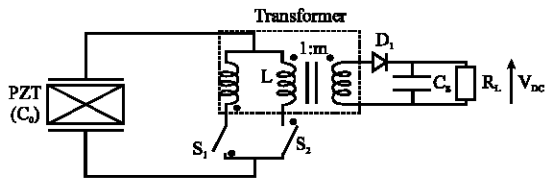

Fig. 10: SSHI-MR technique schematic

To facilitate the startup by the transformer based resonant rectifier SSHI-MR which can significantly reduce the voltage drop of the rectifier and thus allow charge extraction even at very low input voltages. A hybrid topology is reported by Lallart *et al*. (2011, 2008) based on the combination of SSHI-MR and parallel-SSHI concepts. The circuit offers useful output power (more than half of the peak power) over a wider range of load resistances than other resonant rectifiers. Although, the hybrid-SSHI does not further improve the conversion enhancement, it does permit widening the load bandwidth only (Fig. 11).

The previously exposed approaches consisted of directly connecting the piezoelectric element to the storage stage (possibly through an inductor). However, because of this connection, the extracted energy and therefore, harvested powers are closely dependent and suffer from the load-dependency in spite of a great increase of the harvested power. As in realistic applications, the load may not be fixed in advance and can even change with time according to the state of the connected system (examples: sleep mode, RF communication, etc). Hence, a modified approach still based on nonlinear treatment namely SECE has been proposed as shown in Fig. 12 (Lefeuvre *et al*., 2005b). Previously mentioned SSHI inverts the voltage on the piezoelectric energy harvester for increased transfer of power from harvester to load. SECE evacuates the charge available on the generator at the times when it is at a maximum and then uses a fly back converter to push the evacuated charge round an external circuit. In SECE, the rectifier does not include a smoothing capacitor, hence rectified voltage, V_{rect} is not flat. Whenever, the rectified voltage reaches a maximum, the MOSFET is switched on and charge is transferred to the inductor. When the charge is completely transferred (V_{rect} = 0 V), the MOSFET is switched off again. After the MOSFET is switched off, the magnetic field around the inductor collapses, pushing charge round the external circuit (i.e., the capacitor and load resistor). Therefore, no direct connection of the piezoelectric element to the load and thus not influenced by the load characteristics. In experiments the SECE technique was shown to increase power transfer by over 400% compared to impedance adaptation method, the harvester was open-circuit for 8.3 msec while the duration of the charge extraction phase has been just 10 μsec. However, in SECE it is not possible

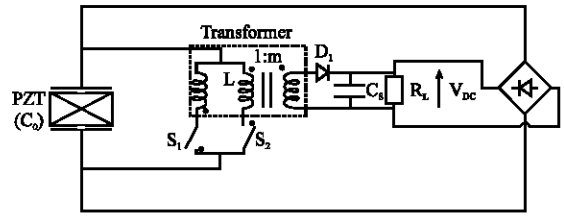

Fig. 11: Hybrid SSHI schematic

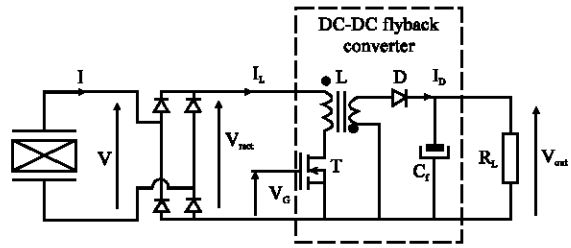

Fig. 12: Circuit that performed SECE technique

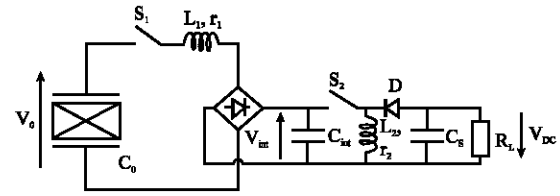

Fig. 13: DSSHcircuit for load independent piezo specific architectures

to control the extraction process only all the energy can be extracted. Voltage escalation process is limited as no inversion is performed. The power gain of this technique is limited to 4 in the best case and the damping introduced by the energy extraction process cannot be controlled which can lead to a great decrease of the harvested energy even to zero when the coupling coefficient increases.

To be able to control the trade-off between extracted energy and voltage escalation as well as the trade-off between energy extraction and damping effect (example: the balance between mechanical energy and conversion abilities) Double Synchronized Switch Harvesting (DSSH) technique was proposed shown in Fig. 13 (Lallart *et al*., 2008). This left part of the scheme includes the piezoelectric element, the switch S_1, the inductor L_1, the diode bridge rectifier and the intermediate capacitor C_{int}. This part corresponds to the configuration of the series-SSHI described earlier. The right part, composed by the switch S_2 the inductor L_2 and the diode D is a buck-boost static converter. This operation approach consists first of transferring a part of the electrostatic energy on the piezoelectric element to an intermediate storage capacitor C_{int} and using the remaining

energy for the inversion process and then transferring the energy on C_{int} to the inductance and finally to the storage stage. By properly tuning the value of the intermediate to piezoelectric capacitance ratio ($C_{int}/C_{0,}$), it was shown that the harvested power can be 6-times higher than when using the classical energy harvesting interface (constant displacement magnitude). When considering the damping effect, the DSSH allows harvesting a significant amount of energy even for low coupling coefficient and typically requires 10 times less piezoelectric material than the classical approach for the same power output. DSSH method, however, needs more components than the other techniques and during implementation externally powered DSP system was employed to generate the quite complex commands of the nonlinear treatment. Therefore, the DSSH approach reported is not a self-powered version of the switching approach and hence not adaptable for truly autonomous devices.

Enhanced Synchronized Switch Harvesting (ESSH) is a further enhancement to the DSSH technique achieved by leaving a small amount of energy on the intermediate capacitor which allows a finer control of the trade-offs between energy extraction and voltage increase and between extracted energy and damping effect (Shen *et al*., 2010). The ESSH approach permits a lower sensitivity to a mismatch in the capacitance ratio.

In the previous methods exposed, once energy is transferred to the source, it cannot go backward. However, pre-biasing circuit, i.e., an energy feedback from the storage stage to the source using the SECE technique is exposed to bypass the limits of the unidirectional stand-alone techniques presented currently (Dicken *et al*., 2011). Pre-biasing technique improves the output power by increasing the electrical damping experienced by the mechanical structure by mimicking the case as the piezoelectric harvester is loaded with an optimal complex-conjugate load that provide bidirectional energy flow from the harvester. Lallart and Guyomar (2010) research showed that the performance improvement through pre-biasing circuit relative to the power output of the standard full-wave rectifier could be a factor of 20-40 depending on the components used considering constant displacement magnitude. The principles of such an approach depicted in Fig. 14. The operations of the energy injection system are as follows: energy extraction using SECE technique, energy injection from the storage stage to the piezoelectric element and open-circuit. After the harvesting event, energy is provided from the storage capacitance to the piezoelectric element. In order to reduce the losses, the energy injection is done through an inductor. By pre-biasing technique, the mechanical resonance of the harvester can be tuned to match the environmental excitation frequency. Because by applying the voltage to the piezoelectric material it is possible to alter its stiffness, thus set desired the mechanical resonance.

Table 2 presents a summary of the circuit techniques that have been investigated toenhance the power output of piezoelectric energy harvesting devices.

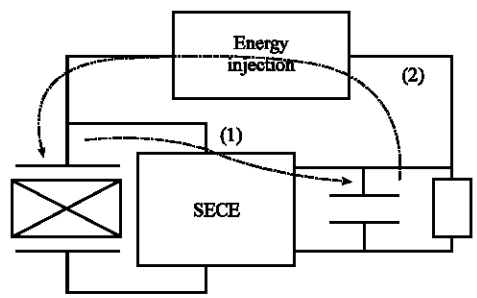

Fig. 14: Pre-biasing circuit featuring energy injection

Table 2: Summarize on literature review from past researcher works

References	Method	Efficiency	Adaptively	Stand-alone	Sensor external	Supply external	Micro scale
Guyomar *et al*. (2005)	Passive rectifier, full-bridge rectifier	Low	No	Yes	No	No	High
Ottman *et al*. (2007) and Ammar *et al*. (2005)	Adaptive, full bridge rectifier	Low	Yes	No	Current	Multi supply voltage (for sensing circuit)	Fair
Guyomar *et al*. (2005) and Lefeuvre *et al*. (2006)	Synchronized switch Harvesting	Fair 70%, peak power 300 mV (Max power loss 15 mV)	No	Yes	Position (to determine switching time with respect to displacement)	Possible multi supply voltage (for the sensing circuit)	Fair
Han *et al*. (2004)	Synchronous rectifier with charge pump	Low	No	Yes	-	-	High
Le *et al*. (2006)	Synchronized rectifier (full bridge or VD)	Low	No	Yes	No	No	High
Ottman *et al*. (2003)	Optimized EH FB rectifier using step-down converter	Fair	No		No	Multi supply voltage	Fair
Lefeuvre *et al*. (2007)	Buck-boost sensor less energy harvester	Above 84% for power range 0.2-1.5 mW (specific load and piezo parameter)	No	Yes	No	Single supply voltage	Fair

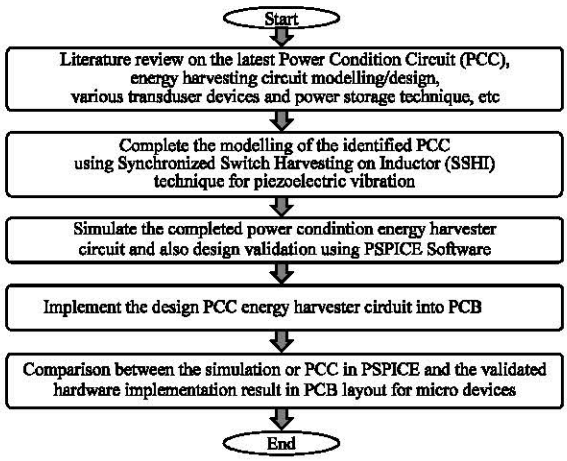

Fig. 15: Design flow of power conditioning circuit implementation

MATERIALS AND METHODS

The design flow chart of the proposed power conditioning interfacecircuitis shown in Fig. 15. The flow chart is originated with literature review; ends with hardware implementation and measure the improvements level due to implementation of power conditioning interface circuit new concept through particular attention in the piezoelectric vibration based energy harvesting system. Power requirements of electronic systems and piezoelectric energy harvester capability to harvest energy from ambient environmental vibrations to date will be analyzed, i.e., the power levels that need to be achieved by the proposed interface circuit concept could be chosen for this study. Various blocks of the proposed power conditioning interface circuit such as the SSHI unit, the storage medium blocks, DC-DC block and piezoelectric energy harvester will be simulated and validated using SPICE Software. Later, the verified circuit will be fabricated into PCB layout. Finally, the simulated results of the proposed power conditioning electronic interface circuit in PSPICE will be compared with the hardware implementation to justify the piezoelectric conversion of vibration energy asthe technology base chosen for this study (Fig. 15).

RESULTS AND DISCUSSION

Power conditioning system for piezoelectric vibration energy harvesting application: Figure 16 shown the proposed EH System topology block diagram with its associated sub-blocks ofdetection, control and switch driving functions, etc. It is envisaged that the proposed 'power conditioning electronic circuit interface' isconnected with the management electronics and the application system. The 'energy harvester unit' represents the piezoelectric vibration energy harvesting device. The 'power management unit' in their carefully envisaged end form, explain the new power conditioning harvesting circuit concept. The application system is outside the scope of the energy harvesting system but an example is depicted in order to illustrate the complete EH System.

The power conditioning circuit interface block incorporates the SSHI technique with charge storage concept as shown in Fig. 17. The charge storage concept implemented in conjunction with the SSHI technique will result in an artificial increase in the voltage output of the piezoelectric material. Maximum power will be transferred in accordance with impedance matching theory. To avoid uncertain nature and limitations of ambient vibration sources, a large energy reservoir over time will be considered. The energy reservoir, when full will turn into a regulated DC supply. The SSHI technique will instantaneously inverts the voltage at the maxima and minima of the piezoelectric harvester displacement, through the use of the switched inductor placed electrically in parallel with the capacitance of the piezoelectric harvesting device. Thus, the longtime requirements for next iteration of charge can be avoided.

Figure 18 shows the operation of the storage medium. Charge pump type circuit will be used to harvest during the whole of each AC output voltage cycle. Two load capacitors are proposed; 'C1' to collect charge during positive half-cycle and 'C2' for collecting charge during negative half-cycle of voltage output. The power conditioning circuit concept adopt the philosophy of collecting charge over time in a storage reservoir such that when the reservoir is full, it is disconnected from the charging circuit and connected instead to the end application system and the process repeated with the reservoir being alternately connected to the charging circuit and load application system so that it is repeatedly charged and discharged.

Figure 19 shows the schematic of the test equipment setup that will be used to test the proposed power conditioning interface circuit. The piezoelectric harvesting device is mounted onto a desktop shaker. The amplifier unit supply the controlled and adjustable frequency to the energy harvesting device. The device output is connected to the load via the proposed power conditioning electronic interface circuit. The amplitude and frequency of the voltage output will be recorded from the oscilloscope.

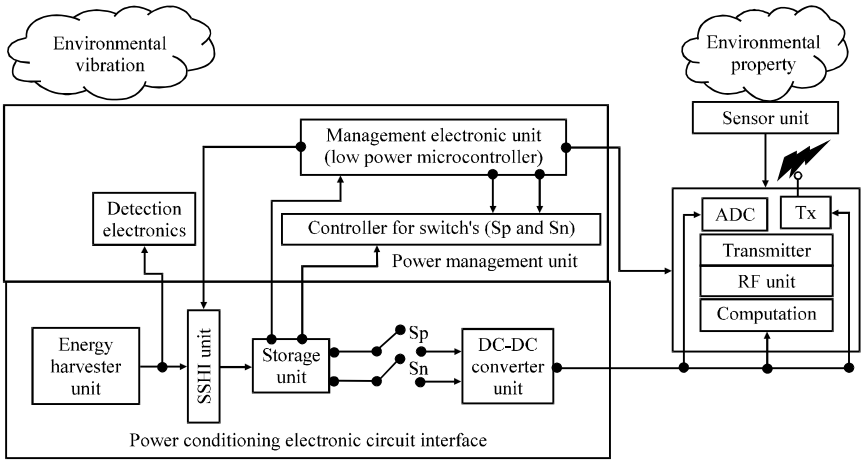

Fig. 16: Proposed system topology block diagram of the harvesting circuit and envisaged power management circuitry

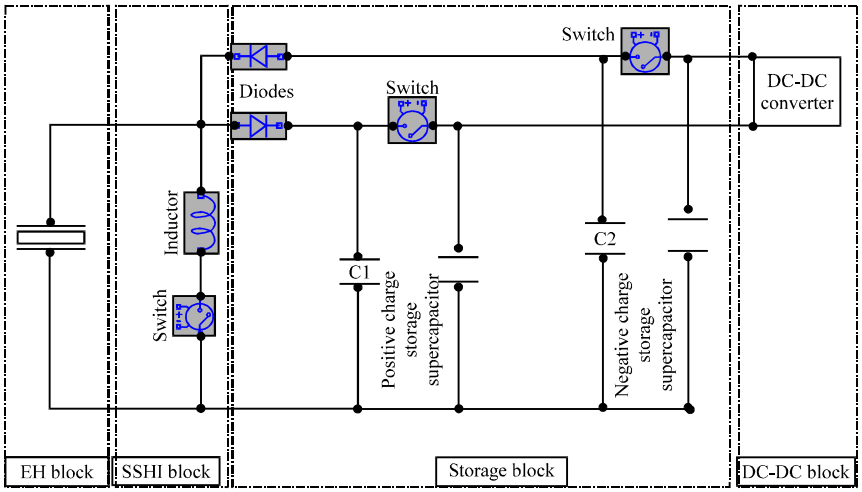

Fig. 17: Schematic of the proposed harvesting circuit to supply a DC-DC converter of the piezoelectric cantilever AC voltage output

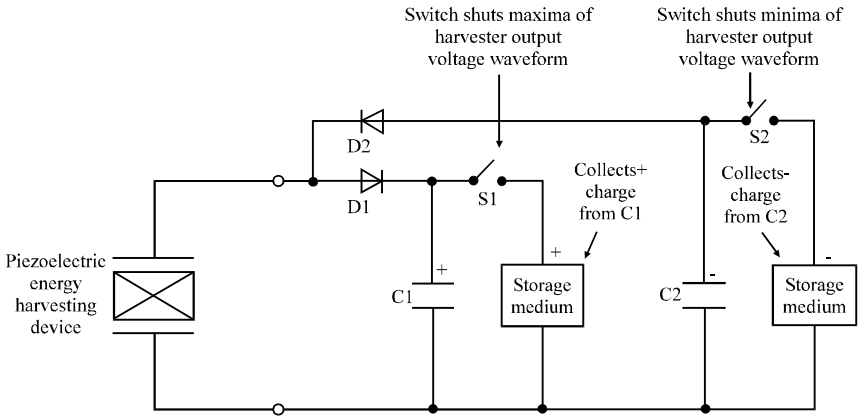

Fig. 18: Charge pump circuit for collecting positive generated charge in one storage medium and negative generated charge in another storage medium

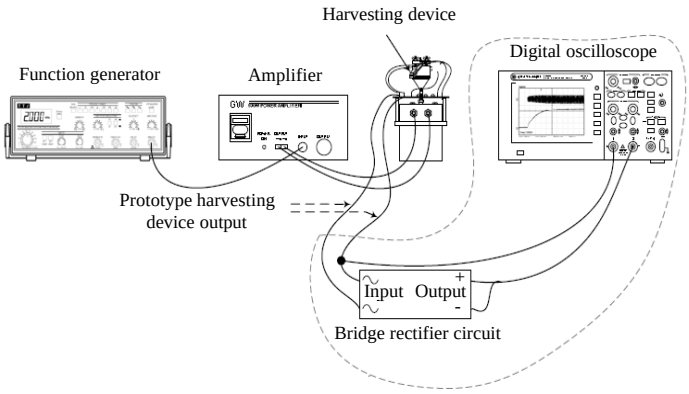

Fig. 19: Schematic of the proposed experimental test setup

CONCLUSION

A comprehensive review has been conducted that covered power enhancement through advances in the design of harvesting circuitry focusing on impedance adaptation and synchronized techniques. The review began with the survey of the power requirements of some modern electronic devices and systems. Information gleaned from the literature, it seems that even though the power levels obtained from harvesting devices has increased over the last 10 years or so there is still a gap between the amount of power that can be harvested and the amount of power that is useful for powering an application. This, coupled with the fact that the power output of a harvesting device is the fundamental parameter that dictates energy harvesting system feasibility, led to the focus on power enhancement as the research objective. Following this, a novel power conditioning electronic interface circuit for piezoelectricenergy harvesting system is proposed to enhance the power output of a piezoelectric based energy harvester device. The new research concept comprises: a SSHI functional block that boosts the output voltage of a piezoelectric energy harvester device; a storage functional block in which harvested charge is collected per half-cycle of the piezoelectric harvester output and then dumped into a large storage capacitor and a DC-DC converter block which uses the reservoir of charge in the storage block to power a buck-boost DC-DC converter which in turn can provideregulated DC power to an end application system. The proposed interface circuit will be verified with both simulation and experimental approach. An enhanced level of output power by utilizing the proposed interface circuit will provide a greater number of potential applications in the future.

REFERENCES

Ammar, Y., A. Buhrig, M. Marzencki, B. Charlot, S. Basrour, K. Matou and M. Renaudin, 2005. Wireless sensor network node with asynchronous architecture and vibration harvesting micro power generator. Proceedings of the Joint Conference on Smart Objects and Ambient Intelligence: Innovative Context-Aware Services: Usages and Technologies, October 12-14, 2005, Grenoble, France, pp: 287-292.

Badel, A., D. Guyomar, E. Lefeuvre and C. Richard, 2006. Piezoelectric energy harvesting using a synchronized switch technique. J. Intell. Mater. Syst. Struct., 17: 831-839.

Bechtel, J.H., F.T. Bauer, J.S. Stam, R.C. Knapp and R.R. Turnbull *et al*., 2004. Vehicle equipment control with semiconductor light sensors. Patents No. US6742904 B2. http://www.google.com/patents/US6742904.

Bhuyan, M.S., M. Othman, S.H. Md Ali, B.Y. Majlis and M.S. Islam, 2013a. Investigation on MEMS-based piezoelectric energy harvester design with aspect of autonomous automobile sensors. Asian J. Sci. Res., 6: 1-15.

Bhuyan, M.S., B.Y. Majlis, S.H.M. Ali, M. Othman and M. Islam, 2013b. Modeling and Finite Element Analysis of a micro energy harvester. Proceedings of the International Conference on Multimedia, Signal Processing and Communication Technologies, November 23-25, 2013, Aligarh, India, pp: 293-296.

Bhuyan, M.S., B.Y. Majlis, M. Othman, S.H.M. Ali, C. Kalaivani and S. Islam, 2013c. Development of a fluid actuated piezoelectric micro energy harvester: Finite element modeling simulation and analysis. Asian J. Scient. Res., 6: 691-702.

Bhuyan, M.S., B.Y. Majlis, M. Othman, S.H.M. Ali, C. Kalaivani and S. Islam, 2013d. Bluff body fluid interactions modelling for micro energy harvesting application. J. Phys.: Conf. Ser., Vol. 431. 10.1088/1742-6596/431/1/012024.

Dicken, J., P. Mitcheson, A. Elliott and E. Yeatman, 2011. Single-supply pre-biasing circuit for low-amplitude energy harvesting applications. Proceedings of the International Workshops on Micro and Nanotechnology for Power Generation and Energy Conversion Applications-PowerMEMS, November 15-18, 2011, Seoul, Republic of Korea.

Ferrari, M., V. Ferrari, M. Guizzetti and D. Marioli, 2009. An autonomous battery-less sensor module powered by piezoelectric energy harvesting with RF transmission of multiple measurement signals. Smart Mater. Struct., Vol.18. 10.1088/0964-1726/18/8/085023.

Flatscher, M., M. Dielacher, T. Herndl, T. Lentsch and R. Matischek *et al*., 2010. A bulk acoustic wave (BAW) based transceiver for an in-tire-pressure monitoring sensor node. IEEE J. Solid-State Circuits, 45: 167-177.

Galchev, T.V., 2010. Energy scavenging from low frequency vibrations. Ph.D. Thesis, University of Michigan, USA.

Garbuio, L., M. Lallart, D. Guyomar, C. Richard and D. Audigier, 2009. Mechanical energy harvester with ultralow threshold rectification based on SSHI nonlinear technique. IEEE Trans. Ind. Electron., 56: 1048-1056.

Guyomar, D., A. Badel, E. Lefeuvre and C. Richard, 2005. Toward energy harvesting using active materials and conversion improvement by nonlinear processing. IEEE Trans. Ultrason. Ferroelectr. Freq. Control, 52: 584-595.

Han, J., A. von Jouanne, T. Le, K. Mayaram and T. Fiez, 2004. Novel power conditioning circuits for piezoelectric micropower generators. Proceedings of the 19th Annual IEEE Applied Power Electronics Conference and Exposition, February 22-26, 2004, Anaheim, CA, pp: 1541-1546.

Harrop, P. and R. Das, 2010. Wireless sensor networks 2010-2020. http://www.sbdi.co.kr/cart/data/info/2049291810_54e75de0_IDTechEx_Wireless_Sensor_Networks_2010-2020_Pamphlet.pdf?ckattempt=1.

Jalil, M.I.A. and J. Sampe, 2013. Experimental investigation of thermoelectric generator modules with different technique of cooling system. Am. J. Eng. Applied Sci., 6: 1-7.

Jiang, X., J. Polastre and D. Culler, 2005. Perpetual environmentally powered sensor networks. Proceedings of the 4th international Symposium on Information Processing in Sensor Networks, April 24-27, 2005, Piscataway, USA., pp: 463-468.

Ke, Y., G. Runquan, Z. Cuixia, C. Minhui, L. Ruiqiang and W. Jiaxin, 2009. ZigBee-based wireless sensor networks. Proceedings of the International Forum on Information Technology and Applications, Volume 1, May 15-17, 2009, Chengdu, China, pp: 618-621.

Konolige, K., J. Augenbraun, N. Donaldson, C. Fiebig and P. Shah, 2008. A low-cost laser distance sensor. Proceedings of the IEEE International Conference on Robotics and Automation, May 19-23, 2008, Pasadena, CA., pp: 3002-3008.

Lallart, M. and D. Guyomar, 2010. Piezoelectric conversion and energy harvesting enhancement by initial energy injection. Applied Phys. Lett., Vol. 97. 10.1063/1.3462304.

Lallart, M., C. Richard, L. Garbuio, L. Petit and D. Guyomar, 2011. High efficiency, wide load bandwidth piezoelectric energy scavenging by a hybrid nonlinear approach. Sens. Actuat. A: Phys., 165: 294-302.

Lallart, M., L. Garbuio, L. Petit, C. Richard and D. Guyomar, 2008. Double synchronized switch harvesting (DSSH): A new energy harvesting scheme for efficient energy extraction. IEEE Trans. Ultrason. Ferroelectr. Frequency Control, 55: 2119-2130.

Le, T.T., 2008. Efficient Power Conversion Interface Circuits for Energy Harvesting Applications. ProQuest, USA., ISBN: 9780549555285, Pages: 224.

Le, T.T., J. Han, A. von Jouanne, K. Mayaram and T.S. Fiez, 2006. Piezoelectric micro-power generation interface circuits. IEEE J. Solid-State Circuits, 41: 1411-1420.

Lefeuvre, E., A. Badel, A. Benayad, L. Lebrun, C. Richard and D. Guyomar, 2005a. A comparison between several approaches of piezoelectric energy harvesting. J. Phys., 128: 177-186.

Lefeuvre, E., A. Badel, C. Richard and D. Guyomar, 2005b. Piezoelectric energy harvesting device optimization by synchronous electric charge extraction. J. Intell. Mater. Syst. Struct., 16: 865-876.

Lefeuvre, E., A. Badel, C. Richard and D. Guyomar, 2004. High performance piezoelectric vibration energy reclamation. Proceedings of the SPIE Smart Structures and Materials Conference, July 26, 2004, San Diego, CA, pp: 379-387.

Lefeuvre, E., A. Badel, C. Richard, L. Petit and D. Guyomar, 2006. A comparison between several vibration-powered piezoelectric generators for standalone systems. Sens. Actuators A: Phys., 126: 405-416.

Lefeuvre, E., D. Audigier, C. Richard and D. Guyomar, 2007. Buck-boost converter for sensorless power optimization of piezoelectric energy harvester. IEEE Trans. Power Electron., 22: 2018-2025.

Lesieutre, G.A., G.K. Ottman and H.F. Hofmann, 2004. Damping as a result of piezoelectric energy harvesting. J. Sound Vibration, 269: 991-1001.

Mi, M.L.S., S.H.M. Ali and M.S. Islam, 2013. A novel architecture of maximum power point tracking for ultra-low-power based hybrid energy harvester in ubiquitous devices: A review. Am. J. Applied Sci., 10: 1240-1251.

Ottman, G.K., H.F. Hofmann and G.A. Lesieutre, 2003. Optimized piezoelectric energy harvesting circuit using step-down converter in discontinuous conduction mode. IEEE Trans. Power Electron., 18: 696-703.

Ottman, G.K., H.F. Hofmann, A.C. Bhatt and G.A. Lesieutre, 2007. Adaptive piezoelectric energy harvesting circuit for wireless remote power supply. IEEE Trans. Power Electron., 17: 669-676.

Paradiso, J.A. and M. Feldmeier, 2001a. A Compact, Wireless, Self-Powered Pushbutton Controller. In: Ubicomp 2001: Ubiquitous Computing, Abowd, G.D., B. Brumitt and S. Shafer (Eds.). Springer, USA., ISBN: 978-3-540-42614-1, pp: 299-304.

Paradiso, J.A. and M. Feldmeier, 2001b. Characterization of a MEMS accelerometer for an underground mine positioning system. Proceedings of the Canadian Conference on Electrical and Computer Engineering, May 1-4, 2005, Saskatoon, Canada, pp: 2268-2271.

Rahimi, M., H. Shah, G. Sukhatme, J. Heideman and D. Estrin, 2003. Studying the feasibility of energy harvesting in a mobile sensor network. Proceedings of the IEEE International Conference on Robotics and Automation, Volume 1, September 1-4, 2003, Cambridge, United Kingdom, pp: 19-24.

Raju, M. and M. Grazier, 2010. Energy harvesting-ULP meets energy harvesting: A game-changing combination for design engineers. White Paper, Texas Instruments, 2010.

Roundy, S. and P.K. Wright, 2004. A piezoelectric vibration based generator for wireless electronics. Smart Mater. Struct., 13: 1131-1142.

Ryckaert, J., C. Desset, A. Fort, M. Badaroglu and V. de Heyn *et al*., 2005. Ultra-wide-band transmitter for low-power wireless body area networks: Design and evaluation. IEEE Trans. Circuits Syst. I: Regular Pap., 52: 2515-2525.

Shen, H., J. Qiu, H. Ji, K. Zhu and M. Balsi, 2010. Enhanced synchronized switch harvesting: A new energy harvesting scheme for efficient energy extraction. Smart Mater. Struct., Vol. 19. 10.1088/0964-1726/19/11/115017.

Stanley-Marbell, P. and D. Marculescu, 2007. An 0.9 x 1.2, low power, energy-harvesting system with custom multi-channel communication interface. Proceedings of the Conference on Design, Automation and Test in Europe, April 16-20, 2007, Nice, France, pp: 15-20.

Szarka, G.D., B.H. Stark and S.G. Burrow, 2012. Review of power conditioning for kinetic energy harvesting systems. IEEE Trans. Power Electron., 27: 803-815.

Tabesh, A. and L.G. Frechette, 2010. A low-power stand-alone adaptive circuit for harvesting energy from a piezoelectric micropower generator. IEEE Trans. Ind. Electron., 57: 840-849.

Vullers, R.J.M., R. van Schaijk, I. Doms, C. van Hoof and R. Mertens, 2009. Micropower energy harvesting. Solid-State Electron., 53: 684-693.