Research Journal of

Environmental Sciences

ISSN 1819-3412

Academic
Journals Inc.

www.academicjournals.com

OPEN ACCESS Research Journal of Environmental Sciences

ISSN 1819-3412
DOI: 10.3923/rjes.2017.177.191

Review Article
Materials and Numerical Analysis of Thermochemical Seasonal Solar Energy Storage for Building Thermal Comfort Applications: A Review

U. Stritih and R. Koželj

Faculty of Mechanical Engineering, University of Ljubljana, Asker eva 6, 1000 Ljubljana, Slovenia

Abstract
Actual national and international energy strategies generally encourage the use of renewable energy sources. Thermal energy storage (TES) offers various opportunities in the design of renewable energy systems. Thermochemical heat storage has gained popularity among researches because of higher energy density and lower heat loss compared to sensible and latent heat storage. On the other side solar energy has been recognized as one of the renewable energy sources with the most potential. This paper reviews thermochemical heat storage materials with emphasis on materials used in systems involving solar energy utilization in buildings. The studies are reviewed based on used storage materials and based on models to predict and optimize system performance.

Key words: Thermochemical heat storage, thermochemical material, adsorption, solar energy, heating, cooling

Citation: U. Stritih and R. Koželj, 2017. Materials and numerical analysis of thermochemical seasonal solar energy storage for building thermal comfort applications. Res. J. Environ. Sci., 11: 177-191.

Corresponding Author: R. Koželj, Faculty of Mechanical Engineering, University of Ljubljana, Ašker eva 6, 1000 Ljubljana, Slovenia

Competing Interest: The authors have declared that no competing interest exists.

Data Availability: All relevant data are within the paper and its supporting information files.

INTRODUCTION

The key targets of the European Union (EU) 2030 Energy Strategy is to reduce greenhouse gas (GHG) emissions by at least 30% compared to 1990 levels, increase the share of renewable energy sources in final energy consumption to at least 27% and achieve an energy efficiency increase of at least 27%. Improving the energy performance of buildings is the key to achieve these goals, as buildings are responsible for 40% of primary energy consumption and 36% of CO_2 emissions in the EU[1,2]. The easiest and also the most promising measure is to increase the utilization of solar energy. The total potential in Slovenia of solar irradiation on horizontal area which can be used for heat and electricity conversion is 5.3×10^{12} kWh/year. Technical potential of solar radiation in Slovenia with consideration of all roofs on houses is 8.3×10^{10} kWh/year. The total solar energy potential in Turkey is 380×10^{12} kWh/year, which ranks in top five among EU members[3]. Due to stochastic nature of solar energy the use of heat storage technologies are necessary to realize its full potential.

Heat storage can be accomplished through physical or chemical processes. With respect to the form of heat involved it is distinguish between sensible and latent physical heat storage methods. Sensible heat storage is achieved through the temperature rise of the storage material. In this case the density of the stored thermal energy (i.e., stored energy/unit volume or mass) depends on the temperature lift and thermal capacity of the storage material. Latent heat storage involves heat interactions associated with a phase change of a material (at constant temperature) commonly from liquid to solid and vice versa. Latent heat storage generally allows higher heat densities than sensible heat storage since thermal energy change during phase change is usually significantly higher than the thermal energy change due to temperature rise of a chosen material. Stritih and Butala[4] investigated cold storage with phase change materials (PCM) which proved to be very perspective for "free cooling" of buildings in night time, where it was pointed out that in the process of using latent heat storage the PCM should provide complete solidification and melting process which depends mostly on local climate conditions and proper PCM selection. All studies according to Osterman *et al.*[5], have shown that the use of PCMs helps to improve energy performance of buildings, the problems were encountered in heat transfer and the amount of PCM needed for storage. In further researches Osterman *et al.*[6,7] proposed a stand-alone unit filled with PCM suitable for heating and cooling of the office. Experimental and numerical investigation took place where annual analysis of the PCM storage unit was investigated and found out that energy consumption in an office can be annually reduced for approximately 142 kWh.

Nevertheless sensible heat storage systems are still the prevalent technology for seasonal solar energy storage because of higher thermal stability and significantly lower cost of the involved storage materials compared to phase change materials (PCMs).

On the other side there are thermochemical heat storage systems which are not yet commercially viable. Thermochemical heat storage involves reversible chemical reactions. During the charging process heat is supplied to the storage material which causes an endothermic reaction. The supplied heat can be stored for an arbitrary time (almost) without heat loss as long as the products of the endothermic reaction are separated. This combined with a several times higher stored thermal energy density compared to sensible and latent storage (Fig. 1) makes thermochemical materials (TCM) a promising alternative for mid and long-term heat storage.

The main objective of this paper was to review TCMs for seasonal heat storage with emphasis on systems involving solar energy utilization in buildings, hence with focus only on TCMs with a charging temperature below 140°C[8].

Thermochemical heat storage

Basics: Thermochemical heat storage is generally classified under chemical heat storage processes (Fig. 2). Sorption heat storage processes are usually summarized under the term thermochemical heat storage. Some authors (e.g., N'Tsoukpoe *et al.*[9]) also mention thermochemical storage without sorption but with no exact definition of the latter. Sorption can be defined as a phenomenon of fixation of a gas by a substance in solid or liquid phase[10]. It is distinguish between adsorption and absorption. The term absorption is used when molecules of a substance in gas phase enter a liquid (usually) or solid thereby changing the composition of the liquid or solid[11]. Adsorption is defined as binding of a gas on a surface of a solid or porous material[9]. Adsorption is further divided in physical adsorption or physisorption and chemical adsorption or chemisorption. The attraction between the gas and solid in physisorption is caused by Van der Waals forces. Chemisorption on the other hand is based on valence forces which form stronger bonds than Van der Waals forces. Consequently chemisorption processes enable to achieve higher thermal energy densities than physisorption, however, may also be irreversible and therefore unsuitable for heat storage applications. In the following sections only reversible sorption processes are considered.

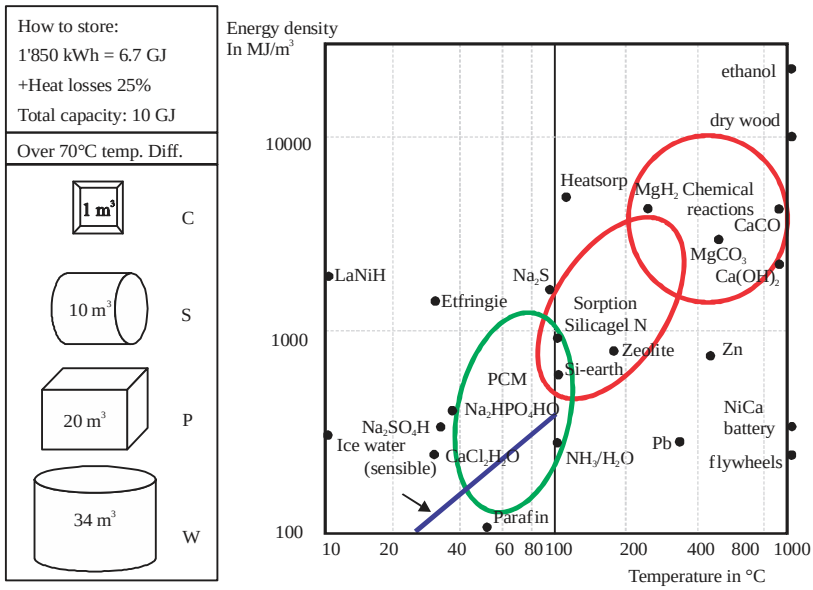

Fig. 1: Energy density of thermal storage technologies[9]

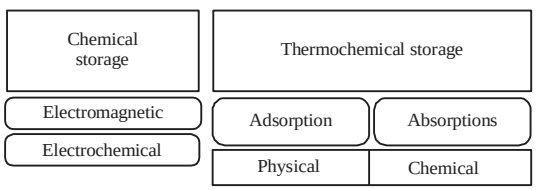

Fig. 2: Classification of chemical heat storage

Reversible sorption heat storage processes can be written in the following way:

$$AB+Q \leftrightarrow A+B \quad (1)$$

where, AB is a compound of components A and B, Q designates the heat supplied to dissociate AB into components A and B. Hence the dissociation of compound AB represents an endothermic reaction. When components A and B are put in contact heat is released (exothermic reaction) during the forming of compound AB. The supplied heat Q can be stored with negligible heat loss as long the components A and B are separated. As a result of this the dissociation of compound AB is called charging while the forming of compound AB represents the discharging process of the thermochemical heat storage cycle (Fig. 3). The component which is desorbed during charging is named adsorbate. The material capable of adsorbing (absorbing) the other component is called adsorbent (absorbent). The term adsorptive (absorptive) is also used for the adsorbate in the desorbed state, especially when adsorbate and adsorptive

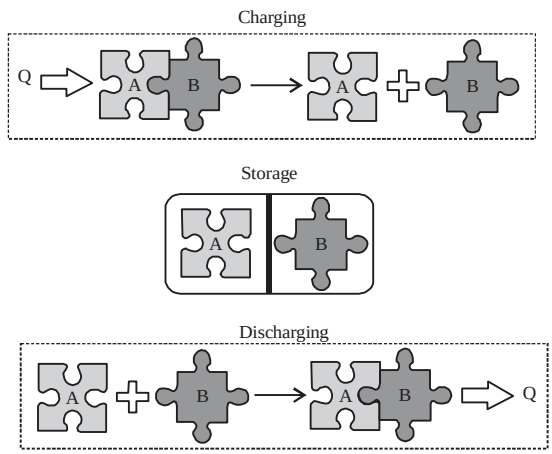

Fig. 3: Thermochemical heat storage cycle

differ in chemical structure (not the case in physisorption). In heat storage applications mainly water (vapour) is used as adsorbate because of its availability (i.e., cheap) and non toxicity.

The heat needed for desorption can be divided into three parts[10]:

$$Q = Q_{sens}+Q_{cond}+Q_{bind} \quad (2)$$

Here, Q_{sens} represents the sensible heat needed to heat the adsorbent to the temperature required for desorption. Q_{cond} is the heat needed to vaporize the adsorbate while Q_{bind} is the heat required to overcome the sorption forces. The latter is

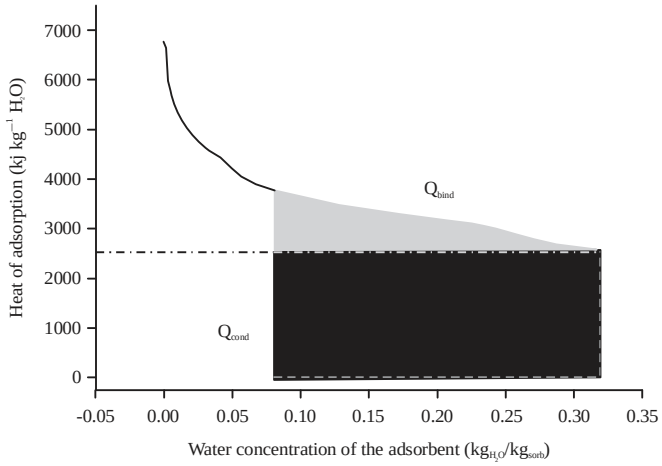

Fig. 4: Break down of the required heat for desorption for Zeolite as an example[10]

therefore usually termed as binding heat. As seen from Fig. 4 Q_{bind} decreases with the increase of sorbate concentration. This means that Q_{bind} is more needed at the beginning of the charging process when the sorbate concentration is low. For heat storage applications the contribution of Q_{bind} must be as low as possible compared to Q_{cond} since it results in lower temperatures required for desorption[12].

Reactants: Knowledge on materials is a prerequisite to design thermal storage systems and their components. Different sorption working pairs or reactants have been studied for thermal energy storage applications. In sorption storage systems, low-cost crystalline or amorphous silica-based porous materials and their composites with hygroscopic inorganic salt hydrates (e.g., $CaCl_2$) have been considered as the most promising sorbents. Despite many scientific efforts, none of these materials currently meet the requirements for large-scale applications. Through the literature[9,12-19] the following requirements for TCMs have been exposed:

- High energy density
- Low charging temperature
- High uptake of sorbate
- Thermal and chemical stability
- High thermal conductivity
- High heat transfer with the heat transfer fluid
- Moderate operating pressure range
- Non-corrosive
- Environmental safety
- Low cost

From listed requirements in previous paragraph the sorption properties are foundations of finding suitable TCMs for any given application, however the comprehensive evaluation of sorption properties of available sorbents is a time consuming task as it requires precise measurements of a set of sorption isobars, isosteres and isotherms under a wide range of temperatures and pressures. The energy storage densities and charging/discharging temperatures of some materials suitable for thermochemical heat storage are listed in Table 1. The most promising TCMs have low charging temperatures and high energy storage densities.

For seasonal solar energy storage in buildings water is the primary sorbate substance of choice since it satisfies the conditions of environmental friendliness and low cost. Hence, hydrophilic materials are appropriate for the counterpart reactant or the sorbent. Silica gels are widely studied as hydrophilic compounds due to their high affinity to water vapour, large water sorption capacity at low humidity, low cost and easy regeneration[17]. However, silica gels have one major drawback, i.e., they provide low material energy densities because of the low hydrophilic characteristic within the working window. Therefore the application prospect of silica gels in solar energy storage is obscure. Zeolites are on the other hand more hydrophilic than silica gel because of the strong interaction between their electrostatically charged framework and the water molecules[64]. Consequently they require a higher desorption or charging temperature which can be altered with dealumination, ion exchange or the variation of the aluminum-silicon ratio[40,61,64,106]. Another option is to impregnate mesoporous silicates with hygroscopic salts[107-111] to increase performance of the sorption reaction and enhance heat and mass transfer. Nevertheless these composite materials suffer from leakage of salt species and are also corrosive due to the contained salts[112].

In some research articles microporous aluminophosphates (APO-n) and their modified analogues (SAPO-n and MeAPO-n) to modify zeolites are favored because

Table 1: Material used in thermochemical heat storage studies

Phenomena	Sorbent	Sorbate	Charging temperature (°C)	Discharging temperature (°C)	Energy density (kWh m^{-3})	References
Adsorption						
	Silica gel	H_2O	88	32	50-125	Mitra *et al.*[20], Chua *et al.*[21], Wang *et al.*[22], Aristov *et al.*[23], Mitra *et al.*[24], Ilis *et al.*[25], Niazmand and Dabzadeh[26], Bjurstrom *et al.*[27], Bales *et al.*[28], Gartler *et al.*[29],Hauer [30], Jahnig *et al.*[31],Wagner *et al.*[32], Basciotti and Pol[33] and Stritih and Bombac[34]
	Zeolite 13X	H_2O	160-180	20-40	97-160.5	Bales [13], Hauer[30], Lehmann *et al.*[35], Schreiber *et al.*[36] Leong and Liu[37], Pal *et al.*[38], Mette *et al.*[39], Janchen *et al.*[40],Hauer [41],Hongois *et al.*[42], Lu *et al.*[43], Bales and Gantenbein[44], Hauer and Fischer [45] Janchen *et al.*[46], Weber *et al.*[47], Mette *et al.*[48], Mette *et al.*[49], Hauer[50] and Johannes *et al.*[51]
	Zeolite 4A	H_2O	180	65	130-148	Bales and Gantenbein[44], Zettl *et al.*[52], Michel *et al.*[53], Kerskes *et al.*[54-56] and Englmair *et al.*[57]
	Zeolite 5A	H_2O	80-120	20-30	83	Cuypers *et al.*[58] and Finck *et al.*[59,60]
	Zeolite MSX	H_2O	230		154	Zettl *et al.*[52] and Englmair *et al.*[57]
	APO-n	H_2O	95-140	40	240	Ristic *et al.*[8], Janchen *et al.*[46], Henninger *et al.*[61,62], Lohse *et al.*[63], Henninger *et al.*[64] and Rajic *et al.*[65]
	SAPO-n	H_2O	95-140	40	-	Ristic *et al.*[8], Janchen *et al.*[46], Henninger *et al.*[61,62], Lohse *et al.*[63] and Henninger *et al.*[64]
	MeAPO-n	H_2O	95-140	40	-	Ristic *et al.*[8], Henninger *et al.*[61,62] and Rajic *et al.*[65]
Absorption						
	$CaCl_2$	H_2O	45-138	21	120-381	Van Essen *et al.*[66], Hui *et al.*[67], Quinnell and Davidson[68], Rammelberg *et al.*[69], Vasiliev *et al.*[70] and Quinnell and Davidson[71]
	LiCl	H_2O	66-87	30	253-400	Bales *et al.*[28] and Hui *et al.*[67]
	$LiCl_2$	H_2O	46-87	30	253	Bales[13] and Bales *et al.*[15,28]
	LiBr	H_2O	40-90	30	252-313	Hui *et al.*[67], N'Tsoukpoe *et al.*[72,73], Cerkvenik *et al.*[74],N'Tsoukpoe *et al.*[75,76]
	NaOH	H_2O	50-95	70	154-250	Bales *et al.*[28], Hui *et al.*[67], Weber and Dorer[77] , Fumey *et al.*[78,79], Daguenet-Frick *et al.*[80], Fumey *et al.*[81,82] and Daguenet-Frick *et al.*[83,84]
	$SrBr_2$	H_2O	80	-	60-321	Michel *et al.*[53], Mauran *et al.*[85], Lahmidi *et al.*[86],Tanguy *et al.*[87], Fopah-Lele *et al.*[88] and Lele *et al.*[89]
Chem. react.						
	$BaCl_2$	NH_3	56-70	40	787	Stitou *et al.*[90], Li *et al.*[91], Le Pierres *et al.*[92], Li *et al.*[93] and Veselovskaya *et al.*[94]
	$CaCl_2$	NH_3	95-99	-	673	Li *et al.*[91,95] and Fadhel *et al.*[96]
	$CaSO_4$	H_2O	-	89	390	Abedin and Rosen[97]
	$CuSO_4$	H_2O	92	-	575	Ferchaud *et al.*[98]
	Li_2SO_4	H_2O	103	-	255	Ferchaud *et al.*[98]
	$MgCl_2$	H_2O	130-150	30-50	556-695	Van Essen *et al.*[66], Rammelberg *et al.*[69] and Zondag *et al.*[99]
	$MgSO_4$	H_2O	122-150	120	420-924	Tatsidjodoung *et al.*[17] and Zondag *et al.*[100]
	$MnCl_2$	NH_3	152	-	624	Li *et al.*[91]
	Na_2S	H_2O	80-95	80-110	780	Iammak *et al.*[101], Boer *et al.*[102], De Boer *et al.*[103] and De Jong *et al.*[104,105]

of lower discharging temperatures and higher energy densities[8,46,61-65]. The main focus in research of materials suitable for heat storage applications has been to increase the uptake of sorbate (water) with incorporating silicon or metal cations in aluminophosphates[8,113,114]. The performance of the latter substances usually degrades after a few charging/discharging cycles because of framework structure degradation and dislodgement of incorporated cations from the framework[61,62,113,114]. However the main limitation of aluminophosphates compared to zeolites (and silica gels) is their high synthesis cost[17,46,64].

In absorption heat storage studies mostly calcium chloride ($CaCl_2$), lithium chloride (LiCl), lithium bromide (LiBr) and sodium hydroxide (NaOH) are used as the reactive sorbent with water as sorbate. Of the listed substances NaOH is a base while the other compounds are hygroscopic salts and are thus applied in form of solutions. Strong acids and bases have the advantage of high water uptake and low cost but are also corrosive and require a high charging temperature.

In contrast to sorption processes chemical reactions are characterized by a change in the molecular configuration of the compound involved during the reactions. Though chemical reactions possess excellent storage potential based on the analysis on the material level their performance in actual systems requires further research. Due to the deliquescence, swelling and agglomeration phenomena after several incipient cycles, the reaction is very difficult to continue[12]. Furthermore because chemical reactions induce volume modification of the solid an obvious hysteresis may exist.

Since sorption processes demand lower activation energy to start the reaction than chemical reactions they are more

suitable for low temperature applications such as seasonal solar energy storage. Furthermore because liquid-gas absorption systems are limited with corrosion and crystallization issues only heat storage applications utilizing solid-gas adsorption processes are discussed in the subsequent sections.

Sorption storage systems: According to the system design, sorption thermal storage systems can be divided into open and closed systems. The key difference between these system configurations is in the storage of the gas reactant (sorbate). Closed systems are isolated from the atmospheric environment therefore they require an additional vessel for storing the working fluid. In contrast the working fluid vapour is released to the environment in open systems which means that only water (vapour) can be used as the sorbate.

Closed system generally consists of two vessels (Fig. 5). Namely a reactor where reactive sorbent is located and a condenser/evaporator where liquid water is collected. The vessels are connected by a conduct as a passage for vapour. The charging process consists of adsorption reaction in the reactor and a phase change reaction in the condenser. When a high temperature heat source (e.g. from solar collector) is added to the reactor the sorbate starts to escape from the sorbent. Through the duct the vapour turns into its liquid state in a condenser at a low temperature level. The heat of condensation is taken away and released to the heat sink. After the charging process is finished the reactor and the condenser are separated from each other. If heating is needed the reactor and the condenser/evaporator are connected again. The discharging process works in a reverse direction whereby an additional low temperature heat source is needed for water evaporation. Closed systems allow adjusting the operating pressure of the working fluid and are able to reach higher output temperatures for heating applications compared to open systems[19]. However the regeneration of closed systems usually requires a higher temperature level. Therefore closed systems are appropriate especially for small scale applications.

In open systems (Fig. 5) a dry air stream is guided to a reactor filled with sorbent during the charging process. Water adsorbed/absorbed by the sorbent is extracted by the hot air and exits the reactor bed. Hereby the air is adiabatically cooled. During discharging cold humid air stream enters into the (desorbed) reactor. Part of the water vapour in the air is attracted by the sorbent. The air temperature increases due to the released sorption heat. Weather conditions are limiting the operation of open systems. The ambient air humidity must be sufficient for a good discharging rate. Thus the air must be additionally humidified when the ambient moisture content is insufficient. The design of open systems is much simpler and consequently cheaper compared to closed systems since they do not require the use of condensers, evaporators and working fluid storage reservoirs. However the main advantage of using the open system configuration are the better heat and mass transfer conditions because the heat transfer fluid (air) is in direct contact with the solid reactant while closed systems require a separate heat transfer loop and hence a heat exchanger in the reactor (heat is transferred mainly by conduction). On the other side open systems may suffer from high (electric) energy consumption for overcoming pressure losses through the reactor.

Numerical modeling: Sorption storage systems can be designed and simulated with the use of numerical models based on characteristics of the storage material. In this way one can optimize the design of the storage system and analyze its performance on an application scale without having to perform costly experiments. Hence, only the most promising storage systems and materials can be tested in full

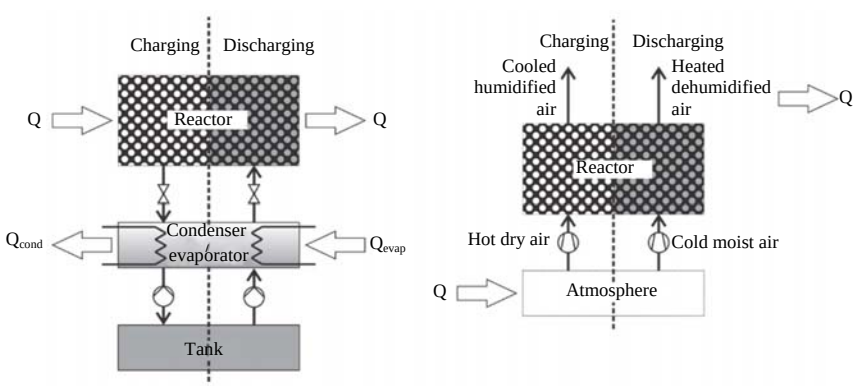

Fig. 5: Operation principle of sorption storage systems: (left) closed, (right) open

scale experiments. There are generally three approaches for modelling solid-gas adsorption processes, i.e., steady-state models, lumped-parameter models and spatially resolved models. Steady-state models disregard the heat and mass transfer kinetics inside the adsorbent bed. Since these models assume that the adsorbate and adsorbent are in thermodynamic equilibrium, they are suitable only to predict the upper performance limit of the storage system. Lumped-parameter models on the other hand consider the global heat and mass transfer between the adsorbent bed and the surrounding but still threat the reactor as a homogenous control volume with an internally uniform state. Because of the higher accuracy compared to steady-state models, lumped-parameter models can be used to approximately size the reactor or to simulate the global performance of the reactor at different conditions. However, for detailed modelling and optimization of processes occurring inside the reactor spatially resolved models are needed, as they consider both heat and mass transfer during a process inside the reactor, i.e., temporospatial evolution of state variables (e.g., temperature gradient inside the adsorbent bed). The drawback of using spatially resolved models is that their computation requires solving transient and spatial coupled heat and mass transfer balance equations with complicated boundary conditions, which involves the application of specialized numerical methods. The mostly applied discretization methods are the finite difference method (FDM), the finite element method (FEM) and the finite volume method (FVM).

Despite the differences between the mentioned modelling approaches all of them need an equilibrium isotherm to calculate the amount of vapour uptake by the adsorbent at a given pressure and temperature. The most widely used approaches for describing adsorption equilibria are the Langmuir isotherm[115], BET isotherm[116], Tòth isotherm[117] and the Dubinin–Polanyi (DP) theory[118]. The latter is the most popular approach since all isolines (isotherms, isobars, isosteres etc.) of an adsorption working pair can be derived (extrapolated) based on one single characteristic curve. The most celebrated expressions for fitting to an experimentally obtained characteristic curve are the Dubinin-Radushkevich (DR) equation[119] and its generalization the Dubinin-Astakhov (DA) equation[120]. A crucial parameter of the Dubinin-Polanyi theory is the adsorbate density function, which describes the temperature dependence of the adsorbate density since it is required to calculate the adsorbent loading and the corresponding adsorption enthalpy. Several density functions were proposed by Cook *et al.*[121] and Nikolaev *et al.*[122] of which none is generally preferred. This dilemma was addressed in the works of Lehmann *et al.*[35] and Nagel *et al.*[123], in both of which a comparative analysis of different adsorbate density models was performed. Lehman *et al.*[35] concluded that the choice of adsorbate density function has little effect on the obtained heat storage densities and hence in view of computational efficiency simpler density models should be preferred. On the other hand, Nagel *et al.*[123], came to the conclusion that for energy storage applications a sufficiently general mathematical expression for an accurate fit of the experimentally determined characteristic curve together with a (quasi) linear density model should be applied.

The mentioned adsorption isotherms only correlate the equilibrium vapour uptake to the conditions (temperature, pressure) in the adsorbent bed. Non-equilibrium states are marked by a difference between the actual vapour uptake and the maximum vapour uptake at equilibrium conditions. This difference dictates the rate of adsorption or the so-called adsorption kinetics. The adsorption kinetics can be modeled by Fickian diffusion[124], linear driving force (LDF) model[125] or its modified form[126]. Among these models the LDF model is the most widely used for modelling, because of its accuracy and simplicity. In the LDF model the mass transfer resistance from the fluid phase into the adsorbent pores is reduced to an overall mass transfer resistance.

The above mentioned adsorption kinetics models account for mass transfer resistance inside the adsorbent particles, i.e. internal mass transfer resistance between the solid and the adsorbate gas. In order to model adsorption processes accurately external mass transfer resistance, i.e. pressure gradient inside the adsorbent bed, must also be considered. The most prevalently used models for describing gas flow inside the adsorbent bed are Darcy's law[127] and Ergun's equation[128]. The latter model is more general, since it includes both viscous and inertial effects. Conversely, Darcy's law assumes that inertial effects are negligible with regard to viscous forces. The application of Navier-Stokes (NS) equations to describe gas flow though porous solids is rare because the exact pore network and topology are unknown and because of its computational complexity.

A summary of solid-gas adsorption processes modelling efforts in the literature concerning heat storage and transformation is provided in Table 2 whereby the works are classified based on the modelled adsorption pair, the aim of modelling, model parameterization, the applied adsorption equilibria approach, the models used for internal and external mass transfer resistances and the numerical methods and/or software used to solve the model equations. For a more comprehensive review concerning numerical modelling of thermochemical heat storage and transformation processes reader is refer to the work done by Nagel *et al.*[164].

Table 2: Summary of modelling efforts in adsorption heat storage transformation studies

Sorbent	Sorbate	Aim	Parameterization	Equilibrium	Kinetics	Mass transport	Numerical method	Software	References
Silica gel	H_2O	System design	1 D	modified DA eq.	LDF	Ergun eq.	FDM	MATLAB	Solmus *et al.*[129]
Silica gel	H_2O	System design	2 D	Tòth isoth.	LDF	-	FDM	-	Chua *et al.*[130]
silica gel	H_2O	System design	2 D	empirical eq. Ng *et al.*[131]	LDF	Ergun eq.	FVM	-	Niazmand and Dabzadeh [26]
Silica gel	H_2O	System design	2 D	Freundlich eq.	LDF	-	FDM	-	Alam *et al.*[132]
Silica gel	H_2O	System design	3 D	empirical eq. Saha *et al.*[134]	LDF	Darcy's law	FVM	-	Mahdavikhah and Niazmand[133]
Silica gel	H_2O	System design	3 D	Tòth isoth.	-	-	FVM	Ansys Fluent	Mitra *et al.*[24]
Silica gel	H_2O	System analysis	lumped	Tòth isoth.	LDF	-	-	MATLAB	Mitra *et al.*[135,136]
Silica gel	H_2O	System analysis	lumped	empirical eq. Boelman *et al.*[138]	LDF	-	BDF	-	Chua *et al.*[137]
Silica gel	H_2O	System analysis	1 D	Tòth isoth.	Aristov *et al.*[140]	-	FDM	-	Chakraborty *et al.*[139]
Silica gel	H_2O	System analysis	1 D	modified DA eq.	-	-	FDM	MATLAB	Allouhi *et al.*[141]
Silica gel	H_2O	System analysis	2 D	empirical eq.	NS eq.	-	FEM	COMSOL Multiphysics	Freni *et al.*[142]
Silica gel	H_2O	Process understanding	1 D	empirical eq. Demir *et al.*[143]	LDF	-	FDM	-	Ilis *et al.*[25]
Silica gel	H_2O	Process understanding	1 D	empirical eq.	LDF	Darcy's law	FDM	-	Demir *et al.*[143]
Silica gel	H_2O	Process understanding	2 D	Tòth isoth.	LDF	Darcy's law	FVM	Ansys Fluent	Mitra *et al.*[20]
Silica gel	H_2O	Process understanding	2 D	modified DR eq.	derived	derived	FDM	-	Riffel *et al.*[144]
Zeolite	H_2O	system design	1 D	DA eq.	LDF	Brinkman eq.	FEM	COMSOL Multiphysics	Mette *et al.*[39]
Zeolite	H_2O	System design	1 D	Langmuir isoth.	-	Ergun eq.	FDM	-	Sun *et al.*[145]
Zeolite	H_2O	System design	2 D	DR eq.	LDF	-	FEM	COMSOL Multiphysics	Narayanan *et al.*[146-148]
Zeolite	H_2O	System analysis	lumped	DP theory, Núñez modification Nunez *et al.*[149]	LDF	-	-	Modelica	Schreiber *et al.*[36]
Zeolite	H_2O	System analysis	1 D	empirical eq.	LDF	Darcy's law	FVM	Dymola	Tatsidjodoung *et al.*[150]
Zeolite	H_2O	System analysis	1 D	modified DA eq. Critoph[152]	LDF	-	FVM	-	Hu *et al.*[151]
Zeolite	H_2O	System analysis	1 D	Gorbach model Critoph[154]	-	-	-	PDEX, TRNSYS	Weber *et al.*[153]
Zeolite	H_2O	System analysis	1 D	empirical eq.	-	Ergun eq.	FVM	-	Nakaso *et al.*[155]
Zeolite	H_2O	System analysis	1 D	empirical eq.	LDF	Darcy's law	FDM	Dymola	Kamdem *et al.*[156]
Zeolite	H2O	System analysis	1 D	empirical eq.	-	Darcy's law	FDM	-	Restuccia *et al.*[157] and Freni *et al.*[158]
Zeolite	H_2O	System analysis	2 D	modified Langmuir isoth. Amar *et al.*[159]	LDF	Poiseuille, Knudsen flow	FVM	-	Leong and Liu[37]
Zeolite	H_2O	System analysis	2 D	empirical eq.	-	Ergun eq.	FDM	-	Marletta *et al.*[160] and Maggio *et al.*[161]
Zeolite	H_2O	System analysis	2 D	modified DA eq. Critoph[152]	LDF	Darcy's law	FDM	-	Wu *et al.*[162]
Zeolite	H_2O	Process understanding	1 D	-	NS eq.	NS eq.	FDM	-	Pal *et al.*[38]
Zeolite	H_2O	Process understanding	2 D	DA eq.	LDF	Brinkman eq.	-	-	Mette *et al.*[49]
Zeolite	H_2O	Process understanding	2 D	DR eq.	NS eq.	Darcy's law	FVM	-	
Zeolite	H_2O	Process understanding	-	DP theory, Núñez modification Nunez[149]	-	-	-	OpenGeoSys	Lehmann *et al.*[35] and Nagel *et al.*[123]

CONCLUSION

In this paper TCMs for thermochemical heat storage were reviewed with emphasis on TCMs used in systems with solar energy utilization in buildings, where studies were reviewed based on used TCMs with charging temperature below 140°C and models to predict and optimize thermochemical storage system performance.

An overview of working pairs studied for thermochemical heat storage was given where none of the presented materials currently meet the requirements for large-scale low temperature heat storage applications due to unsuitable operating conditions (i.e., too high charging temperature), too low energy density and discharging temperature, corrosiveness, thermal/chemical instability, environmentally unfriendly production or high cost. The most promising are solid materials with water vapour as sorbate where the focus of material research has been on zeolites and their composites with hygroscopic inorganic salt hydrates and on microporous aluminophosphates. Nevertheless, one issue is common to all sorption storage materials, i.e. the discrepancy between the material and system energy storage density.

The review of numerical modelling techniques for the reactor design in literature indicates that in the majority of solid-gas adsorption processes modelling efforts the Dubinin-Polanyi theory is applied for describing adsorption equilibria while Darcy's law and LDF model are used to predict the pressure gradient inside the adsorbent bed and the adsorption rate.

To conclude, a better understanding of relations between material synthesis procedures, structural properties and system level properties needs to take place during development of thermochemical heat storage systems.

SIGNIFICANCE STATEMENTS

This study discover the most promising materials of working pairs from studies on thermochemical heat storage and most widely used numerical modeling techniques for reactor design phase. This study help the researchers to uncover the critical areas of thermochemical heat storage systems development that many researchers were not able to explore. Thus a new theory on the relations between material synthesis procedures, structural properties and system level properties may be arrived at.

ACKNOWLEDGMENT

This study was financially supported by the Slovenian Research Agency through research project L1-7665 and research program P2-0223.

REFERENCES

1. European Commision, 2002. Directive 91/EC of the European parliament and of the council of 16 december 2002 on the energy performance of buildings. Off. J. Eur. Union, 4: 65-71.
2. European Union, 2010. Directive 2010/31/EU of the European parliament and of the council of 19 May 2010 on the energy performance of buildings (recast). Off. J. Eur. Union, 53: 13-35.
3. Stritih, U., E. Osterman, H. Evliya, V. Butala and H. Paksoy, 2013. Exploiting solar energy potential through thermal energy storage in Slovenia and Turkey. Renewable Sustainable Energy Rev., 25: 442-461.
4. Stritih, U. and V. Butala, 2010. Experimental investigation of energy saving in buildings with PCM cold storage. Int. J. Refrig., 33: 1676-1683.
5. Osterman, E., V.V. Tyagi, V. Butala, N.A. Rahim and U. Stritih, 2012. Review of PCM based cooling technologies for buildings. Energy Build., 49: 37-49.
6. Osterman, E., K. Hagel, C. Rathgeber, V. Butala and U. Stritih, 2015. Parametrical analysis of latent heat and cold storage for heating and cooling of rooms. Applied Therm. Eng., 84: 138-149.
7. Osterman, E., V. Butala and U. Stritih, 2015. PCM thermal storage system for free heating and cooling of buildings. Energy Build., 106: 125-133.
8. Ristic, A., N.Z. Logar, S.K. Henninger and V. Kaucic, 2012. The performance of small-pore microporous aluminophosphates in low-temperature solar energy storage: The structure-property relationship. Adv. Funct. Mater., 22: 1952-1957.
9. N'Tsoukpoe, K.E., H. Liu, N. Le Pierres and L. Luo, 2009. A review on long-term sorption solar energy storage. Renewable Sustainable Energy Rev., 13: 2385-2396.
10. Hauer, A., 2007. Sorption Theory for Thermal Energy Storage. In: Thermal Energy Storage Sustainable Energy Consumption, Paksoy, H.O. (Ed.). Springer, New York, ISBN: 9781402052903, pp: 393-408.
11. McGlashan, M.L., 1970. Manual of symbols and terminology for physicochemical quantities and units. Pure Applied Chem., 21: 1-44.
12. Yu, N., R.Z. Wang and L.W. Wang, 2013. Sorption thermal storage for solar energy. Progr. Energy Combust. Sci., 39: 489-514.
13. Bales, C., 2005. Thermal properties of materials for thermo-chemical storage of solar heat. A Technical Report of Subtask B, May 2005.
14. Wongsuwan, W., S. Kumar, P. Neveu and F. Meunier, 2001. A review of chemical heat pump technology and applications. Applied Thermal Eng., 21: 1489-1519.
15. Bales, C., P. Gantenbein, D. Jaenig, H. Kerskes, M. van Essen, R. Weber and H. Zondag, 2008. Final report of subtask B chemical and sorption storage: Report B7 of Subtask B 2008. http://swepub.kb.se/bib/swepub:oai:dalea.du.se:3375?tab2=abs&language=en

16. Aydin, D., S.P. Casey and S. Riffat, 2015. The latest advancements on thermochemical heat storage systems. Renewable Sustainable Energy Rev., 41: 356-367.
17. Tatsidjodoung, P., N.L. Pierres and L. Luo, 2013. A review of potential materials for thermal energy storage in building applications. Renew. Sustainable Energy Rev., 18: 327-349.
18. Ding, Y. and S.B. Riffat, 2012. Thermochemical energy storage technologies for building applications: A state-of-the-art review. Int. J. Low-Carbon Technol., 8: 106-116.
19. Sole, A., I. Martorell and L.F. Cabeza, 2015. State of the art on gas-solid thermochemical energy storage systems and reactors for building applications. Renewable Sustainable Energy Rev., 47: 386-398.
20. Mitra, S., N. Aswin and P. Dutta, 2016. Scaling analysis and numerical studies on water vapour adsorption in a columnar porous silica gel bed. Int. J. Heat Mass Transfer, 95: 853-864.
21. Chua, H.T., K.C. Ng, A. Chakraborty, N.M. Oo and M.A. Othman, 2002. Adsorption characteristics of silica gel + water systems. J. Chem. Eng. Data, 47: 1177-1181.
22. Wang, X., W. Zimmermann, K.C. Ng, A. Chakraboty and J.U. Keller, 2004. Investigation on the isotherm of silica gel + water systems. J. Thermal Anal. Calorim., 76: 659-669.
23. Aristov, Y.I., M.M. Tokarev, A. Freni, I.S. Glaznev and G. Restuccia, 2006. Kinetics of water adsorption on silica Fuji Davison RD. Microporous Mesoporous Mater., 96: 65-71.
24. Mitra, S., S.T. Oh, B.B. Saha, P. Dutta and K. Srinivasan, 2015. Simulation study of the adsorption dynamics of cylindrical silica gel particles. Heat Transfer Res., 46: 123-140.
25. Ilis, G.G., M. Mobedi and S. Ulku, 2011. A dimensionless analysis of heat and mass transport in an adsorber with thin fins; uniform pressure approach. Int. Commun. Heat Mass Transfer, 38: 790-797.
26. Niazmand, H. and I. Dabzadeh, 2012. Numerical simulation of heat and mass transfer in adsorbent beds with annular fins. Int. J. Refrig., 35: 581-593.
27. Bjurstrom, H., E. Karawacki and B. Carlsson, 1984. Thermal conductivity of a microporous particulate medium: Moist silica gel. Int. J. Heat Mass Transfer, 27: 2025-2036.
28. Bales, C., P. Gantenbein, D. Jaenig,H. Kerskes, K. Summer, M. van Essen and R. Weber, 2008. Laboratory tests of chemical reactions and prototype sorption storage units. A Report IEA Solar Heating and Cooling Programme-Task 32, pp: 55.
29. Gartler, G., D. Jahnig, G. Porkarthofer and W. Wagner, 2004. Development of a high energy density sorption storage system. EuroSun. http://projekte.aee-intec.at/0uploads/dateien7.pdf
30. Hauer, A., 2007. Adsorption Systems for TES-Design and Demonstration Projects. In: Thermal Energy Storage for Sustainable Energy Consumption, Paksoy, H.O. (Ed.). Springer, New York, pp: 409-427.
31. Jahnig, D., R. Hausner, W. Wagner and C. Isaksson, 2006. Thermo-chemical storage for solar space heating in a single-family house. Proceedings of the ECOSTOCK Conference, May 31-June 2, 2006, New Jersey, pp: 1-7.
32. Wagner, W., D. Jahnig, C. Isaksson and R. Hausner, 2006. Modularer energiespeicher nach dem sorptionsprinzip mit hoher energiedichte (MODESTORE). Berichte aus Energie-und Umweltforsch, 2006.
33. Basciotti, D. and O. Pol, 2011. A theoretical study of the impact of using small scale thermo chemical storage units in district heating networks. Proceedings of the International Sustainable Energy Conference, (ISEC'11), Belfast, pp: 1-10.
34. Stritih, U. and A. Bombac, 2014. Description and analysis of adsorption heat storage device. J. Mech. Eng., 60: 619-628.
35. Lehmann, C., S. Beckert, R. Glaser, O. Kolditz and T. Nagel, 2017. Assessment of adsorbate density models for numerical simulations of zeolite-based heat storage applications. Applied Energy, 185: 1965-1970.
36. Schreiber, H., S. Graf, F. Lanzerath and A. Bardow, 2015. Adsorption thermal energy storage for cogeneration in industrial batch processes: Experiment, dynamic modeling and system analysis. Applied Thermal Eng., 89: 485-493.
37. Leong, K.C. and Y. Liu, 2004. Numerical modeling of combined heat and mass transfer in the adsorbent bed of a zeolite/water cooling system. Applied Thermal Eng., 24: 2359-2374.
38. Pal, S., M.R. Hajj, W.P. Wong and I.K. Puri, 2014. Thermal energy storage in porous materials with adsorption and desorption of moisture. Int. J. Heat Mass Transfer, 69: 285-292.
39. Mette, B., H. Kerskes and H. Druck, 2014. Experimental and numerical investigations of different reactor concepts for thermochemical energy storage. Energy Procedia, 57: 2380-2389.
40. Janchen, J., D. Ackermann, H. Stach and W. Brosicke, 2004. Studies of the water adsorption on zeolites and modified mesoporous materials for seasonal storage of solar heat. Solar Energy, 76: 339-344.
41. Hauer, A., 2002. Thermal energy storage with zeolite for heating and cooling applications. Proceedings of the 7th International Sorption Heat Pump Conference, (ISHPC'02), Kobe, Japan, pp: 385-390.
42. Hongois, S., F. Kuznik, P. Stevens and J.J. Roux, 2011. Development and characterisation of a new $MgSO_4$-zeolite composite for long-term thermal energy storage. Solar Energy Mater. Solar Cells, 95: 1831-1837.
43. Lu, Y.Z., R.Z. Wang, M. Zhang and S. Jiangzhou, 2003. Adsorption cold storage system with zeolite-water working pair used for locomotive air conditioning. Energy Convers. Manage., 44: 1733-1743.
44. Bales, C. and P. Gantenbein, 2007. Laboratory prototypes of thermo-chemical and sorption storage units. Report B3-IEA SHC Task 32.

45. Hauer, A. and F. Fischer, 2011. Open adsorption system for an energy efficient dishwasher. Chemie Ingenieur Technik, 83: 61-66.
46. Janchen, J., D. Ackermann, E. Weiler, H. Stach and W. Brosicke, 2005. Calorimetric investigation on zeolites, $AlPO_4$'s and $CaCl_2$ impregnated attapulgite for thermochemical storage of heat. Thermochim. Acta, 434: 37-41.
47. Weber, R., S. Asenbeck, H. Kerskes and H. Druck, 2016. SolSpaces-testing and performance analysis of a segmented sorption store for solar thermal space heating. Energy Procedia, 91: 250-258.
48. Mette, B., H. Kerskes, H. Druck, T. Badenhop, F. Salg and R. Glaser, 2013. Thermochemical energy storage as an element for the energy turnaround. Proceedings of the 8th International Renewable Energy Storage Conference, November 18-20, 2013, Berlin, pp: 1-10.
49. Mette, B., H. Kerskes, H. Druck and H. Muller-Steinhagen, 2014. Experimental and numerical investigations on the water vapor adsorption isotherms and kinetics of binderless zeolite 13X. Int. J. Heat Mass Transfer, 71: 555-561.
50. Hauer, A., 2007. Evaluation of adsorbent materials for heat pump and thermal energy storage applications in open systems. Adsorption, 13: 399-405.
51. Johannes, K., F. Kuznik, J.L. Hubert, F. Durier and C. Obrecht, 2015. Design and characterisation of a high powered energy dense zeolite thermal energy storage system for buildings. Applied Energy, 159: 80-86.
52. Zettl, B., G. Englmair and G. Steinmaurer, 2014. Development of a revolving drum reactor for open-sorption heat storage processes. Applied Thermal Eng., 70: 42-49.
53. Michel, B., N. Mazet, S. Mauran, D. Stitou and J. Xu, 2012. Thermochemical process for seasonal storage of solar energy: Characterization and modeling of a high density reactive bed. Energy, 47: 553-563.
54. Kerskes, H., B. Mette, S. Asenbeck, H. Druck and H. Muller-Steinhagen, 2010. Experimental and Numerical investigations on thermo-chemical heat storage. Proceedings of the EuroSun Conference, September 28-October 1, 2010, Graz, Austria, pp: 1-10.
55. Kerskes, H., W. Heidemann and H. Muller-Steinhagen, 2004. MonoSorp-Ein weiterer Schritt auf dem Weg zur vollstandig solarthermischen gebaudeheizung. Proceedings of the 14th Symposium Thermische Solarenergie, May 12-14, 2004, Kloster Banz, pp: 169-173.
56. Kerskes, H., K. Sommer and H. Muller-Steinhagen, 2007. Monosorp-Integrales Konzept zur solarthermischen Gebaudeheizung mit Sorptionswarmespeicher. Forderkennzeichen: BWK 25006, September 2007.
57. Englmair, G., B. Zettl and D. Lager, 2014. Characterisation of a rotating adsorber designed for thermochemical heat storage processes. Proceedings of the EuroSun Conference, September 16-19, 2014, France, pp: 1-8.
58. Cuypers, R., N. Maraz, J. Eversdijk, C. Finck and E. Henquet *et al*., 2012. Development of a seasonal thermochemical storage system. Energy Procedia, 30: 207-214.
59. Finck, C., H. van Spijker, A. de Jong and E. Henquet, 2013. Design of a modular 3 kWh thermochemical heat storage system for space heating application. Proceedings of the SESB-2nd International Conference on Sustainable Energy Storage, June 19-21, 2013, Dublin, Ireland.
60. Finck, C., E. Henquet, C. van Soest, H. Oversloot, A.J. de Jong, R. Cuypers and H. van't Spijker, 2014. Experimental results of a 3 kWh thermochemical heat storage module for space heating application. Energy Procedia, 48: 320-326.
61. Henninger, S.K., F.P. Schmidt and H.M. Henning, 2010. Water adsorption characteristics of novel materials for heat transformation applications. Applied Therm. Eng., 30: 1692-1702.
62. Henninger, S.K., G. Munz, K.F. Ratzsch and P. Schossig, 2011. Cycle stability of sorption materials and composites for the use in heat pumps and cooling machines. Renewable Energy, 36: 3043-3049.
63. Lohse, U., E. Liiffler, K. Kosche, J. Janchen and B. Parlitz, 1993. Isomorphous substitution of silicon in the erionite-like structure $AlP0_4$-17 and acidity of SAPO-17. Zeolites, 13: 549-556.
64. Henninger, S.K., F. Jeremias, H. Kummer, P. Schossig and H.M. Henning, 2012. Novel sorption materials for solar heating and cooling. Energy Procedia, 30: 279-288.
65. Rajic, N., R. Gabrovsek, A. Ristic and V. Kaucic, 1997. Thermal investigations of some AlPO and MeAPO materials prepared in the presence of HF. Thermochim. Acta, 306: 31-36.
66. Van Essen, V.M., J. Cot Gores, L.P.J. Bleijendaal, H.A. Zondag, R. Schuitema, M. Bakker and W.G.J. van Helden, 2009. Characterization of salt hydrates for compact seasonal thermochemical storage. Proceedings of the 3rd International Conference on Energy Sustainability, Volume 2, July 19-23, 2009, San Francisco, California, USA., pp: 825-830.
67. Hui, L., K.E. N'Tsoukpoe and L. Lingai, 2011. Evaluation of a seasonal storage system of solar energy for house heating using different absorption couples. Energy Convers. Manage., 52: 2427-2436.
68. Quinnell, J.A. and J.H. Davidson, 2012. Mass transfer during sensible charging of a hybrid absorption/sensible storage tank. Energy Procedia, 30: 353-361.
69. Rammelberg, H.U., T. Schmidt and W. Ruck, 2012. Hydration and dehydration of salt hydrates and hydroxides for thermal energy storage-kinetics and energy release. Energy Procedia, 30: 362-369.
70. Vasiliev, L.L., D.A. Mishkinis, A.A. Antukh and L.L. Vasiliev Jr., 2001. Solar-gas solid sorption refrigerator. Adsorption, 7: 149-161.
71. Quinnell, J.A. and J.H. Davidson, 2014. Heat and mass transfer during heating of a hybrid absorption/sensible storage tank. Solar Energy, 104: 19-28.

72. N'Tsoukpoe, K.E., N. Le Pierres and L. Luo, 2012. Numerical dynamic simulation and analysis of a lithium bromide/water long-term solar heat storage system. Energy, 37: 346-358.
73. N'Tsoukpoe, K.E., N. Le Pierres and L. Luo, 2013. Experimentation of a LiBr-H_2O absorption process for long-term solar thermal storage: Prototype design and first results. Energy, 53: 179-198.
74. Cerkvenik, B., P. Satzger, F. Ziegler and A. Poredos, 1999. High efficient sorption cycles using CaO/H_2O and LiBr/H_2O for gas cooling. Proceedings of the 3rd ASME/RAES Renewable and Advanced Energy Systems for the 21st Century Conference, April 11-14, 1999, Lahaina, Maui, Hawaii, pp: 3-8.
75. N'Tsoukpoe, K.E., N. Le Pierres and L. Luo, 2012. Experimentation of a LiBr-H_2O absorption process for long term solar thermal storage. Energy Procedia, 30: 331-341.
76. N'Tsoukpoe, K.E., M. Perier-Muzet, N. Le Pierres, L. Luo and D. Mangin, 2014. Thermodynamic study of a LiBr-H_2O absorption process for solar heat storage with crystallisation of the solution. Solar Energy, 104: 2-15.
77. Weber, R. and V. Dorer, 2008. Long-term heat storage with NaOH. Vacuum, 82: 708-716.
78. Fumey, B., R. Weber, P. Gantenbein, X. Daguenet-Frick, T. Williamson and V. Dorer, 2014. Development of a closed sorption heat storage prototype. Energy Procedia, 46: 134-141.
79. Fumey, B., R. Weber, P. Gantenbein, X. Daguenet-Frick, T. Williamson and V. Dorer, 2014. Closed sorption heat storage based on aqueous sodium hydroxide. Energy Procedia, 48: 337-346.
80. Daguenet-Frick, X., P. Gantenbein, E. Frank, B. Fumey, R. Weber and T. Williamson, 2014. Reaction zone development for an aqueous sodium hydroxide seasonal thermal energy storage. Energy Procedia, 57: 2426-2435.
81. Fumey, B., R. Weber, P. Gantenbein, X. Daguenet-Frick, T. Williamson, V. Dorer and J. Carmeliet, 2014. Experience on the development of a thermo-chemical storage system based on aqueous sodium hydroxide. Energy Procedia, 57: 2370-2379.
82. Fumey, B., R. Weber, P. Gantenbein, X. Daguenet-Frick, S. Stoller, R. Fricker and V. Dorer, 2015. Operation results of a closed sorption heat storage prototype. Energy Procedia, 73: 324-330.
83. Daguenet-Frick, X., P. Gantenbein, E. Frank, B. Fumey and R. Weber, 2015. Development of a numerical model for the reaction zone design of an aqueous sodium hydroxide seasonal thermal energy storage. Solar Energy, 121: 17-30.
84. Daguenet-Frick, X., P. Gantenbein, M. Rommel, B. Fumey, R. Weber, K. Gooneseker and T. Williamson, 2015. Seasonal solar thermal absorption energy storage development. Chim. Int. J. Chem., 69: 784-788.
85. Mauran, S., H. Lahmidi and V. Goetz, 2008. Solar heating and cooling by a thermochemical process. First experiments of a prototype storing 60kWh by a solid/gas reaction. Solar Energy, 82: 623-636.
86. Lahmidi, H., S. Mauran and V. Goetz, 2006. Definition, test and simulation of a thermochemical storage process adapted to solar thermal systems. Solar Energy, 80: 883-893.
87. Tanguy, G., F. Marias, S. Rouge, J. Wyttenbach and P. Papillon, 2012. Parametric studies of thermochemical processes for seasonal storage. Energy Procedia, 30: 388-394.
88. Fopah-Lele, A., C. Rohde, K. Neumann, T. Tietjen and T. Ronnebeck *et al*., 2016. Lab-scale experiment of a closed thermochemical heat storage system including honeycomb heat exchanger. Energy, 114: 225-238.
89. Lele, A.F., F. Kuznik, O. Opel and W.K. Ruck, 2015. Performance analysis of a thermochemical based heat storage as an addition to cogeneration systems. Energy Convers. Manage., 106: 1327-1344.
90. Stitou, D., N. Mazet and S. Mauran, 2012. Experimental investigation of a solid/gas thermochemical storage process for solar air-conditioning. Energy, 41: 261-270.
91. Li, T., R. Wang and J.K. Kiplagat, 2013. A target oriented solid gas thermochemical sorption heat transformer for integrated energy storage and energy upgrade. AIChE J., 59: 1334-1347.
92. Le Pierres, N., N. Mazet and D. Stitou, 2007. Experimental results of a solar powered cooling system at low temperature. Int. J. Refrig., 30: 1050-1058.
93. Li, T.X., R.Z. Wang, J.K. Kiplagat and H. Chen, 2010. Experimental study and comparison of thermochemical resorption refrigeration cycle and adsorption refrigeration cycle. Chem. Eng. Sci., 65: 4222-4230.
94. Veselovskaya, J.V., R.E. Critoph, R.N. Thorpe, S. Metcalf, M.M. Tokarev and Y.I. Aristov, 2010. Novel ammonia sorbents "porous matrix modified by active salt" for adsorptive heat transformation: 3. Testing of "$BaCl_2$/vermiculite" composite in a lab-scale adsorption chiller. Applied Thermal Eng., 30: 1188-1192.
95. Li, T., R. Wang, J.K. Kiplagat and Y.T. Kang, 2013. Performance analysis of an integrated energy storage and energy upgrade thermochemical solid-gas sorption system for seasonal storage of solar thermal energy. Energy, 50: 454-467.
96. Fadhel, M.I., K. Sopian and W.R.W. Daud, 2010. Performance analysis of solar-assisted chemical heat-pump dryer. Solar Energy, 84: 1920-1928.
97. Abedin, A.H. and M.A. Rosen, 2011. A critical review of thermochemical energy storage systems. Open Renewable Energy J., 4: 42-46.
98. Ferchaud, C.J., H.A. Zondag and R. de Boer, 2013. Material research on salt hydrates for seasonal heat storage application in a residential environment. Proceedings of the International Symposium on Innovative Materials for Processes in Energy System, September 4-6, 2013, Fukuoka, Japan.

99. Zondag, H., B. Kikkert, S. Smeding, R. de Boer and M. Bakker, 2013. Prototype thermochemical heat storage with open reactor system. Applied Energy, 109: 360-365.
100. Van Essen, V.M., H.A. Zondag, J.C. Gores, L.P.J. Bleijendaal and M. Bakker *et al*., 2009. Characterization of MgSO4 hydrate for thermochemical seasonal heat storage. J. Solar Energy Eng., Vol. 131. 10.1115/1.4000275.
101. lammak, K., W. Wongsuwan and T. Kiatsiriroj, 2004. Investigation of modular chemical energy storage performance 2. Experimental set up. Proceedings of the Joint International Conference on Energy and Environment, Volume 22, December 1-3, 2004, Thailand, pp: 504-507.
102. Boer, R.D., W.G. Haije, J.B.J. Veldhuis and S.F. Smeding, 2004. Solid-sorption cooling with integrated thermal storage-the SWEAT prototype. Proceedings of the 3rd International Heat Powered Cycles Conference, August 2004, Larnaca, Cyprus.
103. De Boer, R., W.G. Haije and J.B.J. Veldhuis, 2002. Determination of structural, thermodynamic and phase properties in the Na_2S-H_2O system for application in a chemical heat pump. Thermochim. Acta, 395: 3-19.
104. De Jong, A.J., F. Trausel, C. Finck, L. Van Vliet and R. Cuypers, 2014. Thermochemical heat storage-system design issues. Energy Proceedia, 48: 309-319.
105. De Jong, A.J., L. van Vliet, C. Hoegaerts, M. Roelands and R. Cuypers, 2016. Thermochemical heat storage-from reaction storage density to system storage density. Energy Proc., 91: 128-137.
106. Henninger, S.K., F.P. Schmidt, T. Nunez and H.M. Henning, 2005. Monte Carlo investigations of the water adsorption behavior in MFI type zeolites for different Si/Al ratios with regard to heat storage applications. Adsorption, 11: 361-366.
107. Gordeeva, L.G., G. Restuccia, G. Cacciola and Y.I. Aristov, 1998. Selective water sorbents for multiple applications, 5. LiBr confined in mesopores of silica gel: Sorption properties. React. Kinet. Catal. Lett., 63: 81-88.
108. Levitskij, E.A., Y.I. Aristov, M.M. Tokarev and V.N. Parmon, 1996. "Chemical heat accumulators": A new approach to accumulating low potential heat. Solar Energy Mater. Solar Cells, 44: 219-235.
109. Mrowiec-Bialon, J., A.B. Jarzebski, A.I. Lachowski, J.J. Malinowski and Y.I. Aristov, 1997. Effective inorganic hybrid adsorbents of water vapor by the sol-gel method. Chem. Mater., 9: 2486-2490.
110. Mrowiec-Białon, J., A.I. Lachowski, A.B. Jarzebski, L.G. Gordeeva and Y.I. Aristov, 1999. SiO_2-LiBr nanocomposite sol-gel adsorbents of water vapor: Preparation and properties. J. Colloid Interf. Sci., 218: 500-503.
111. Zhu, D., H. Wu and S. Wang, 2006. Experimental study on composite silica gel supported $CaCl_2$ sorbent for low grade heat storage. Int. J. Thermal Sci., 45: 804-813.
112. Ponomarenko, I.V., I.S. Glaznev, A.V. Gubar, Y.I. Aristov and S.D. Kirik, 2010. Synthesis and water sorption properties of a new composite "$CaCl_2$ confined into SBA-15 pores". Microporous Mesoporous Mater., 129: 243-250.
113. Floquet, N., J.P. Coulomb, N. Dufau and G. Andre, 2004. Structure and dynamics of confined water in $AlPO_4$-5 zeolite. J. Phys. Chem. B, 108: 13107-13115.
114. Buchholz, A., W. Wang, M. Xu, A. Arnold and M. Hunger, 2002. Thermal stability and dehydroxylation of bronsted acid sites in silicoaluminophosphates H-SAPO-11, H-SAPO-18, H-SAPO-31 and H-SAPO-34 investigated by multi-nuclear solid-state NMR spectroscopy. Microporous Mesoporous Mater., 56: 267-278.
115. Langmuir, I., 1918. The adsorption of gases on plane surfaces of glass, mica and platinum. J. Am. Chem. Soc., 40: 1361-1403.
116. Brunauer, S., P.H. Emmett and E. Teller, 1938. Adsorption of gases in multimolecular layers. J. Am. Chem. Soc., 60: 309-319.
117. Toth, J., 1971. State equation of the solid-gas interface layers. Acta Chim. Hung., 69: 311-328.
118. Dubinin, M.M., 1967. Adsorption in micropores. J. Colloid Interf. Sci., 23: 487-499.
119. Dubinin, M.M. and L.V. Radushkevich, 1947. The equation of the characteristic curve of the activated charcoal. Dokl. Acad. Nauk SSSR., 55: e331-e337.
120. Dubinin, M.M. and V.F. Astakhov, 1971. Adsorption on microporous sorbents. Sov. Chem. Bull. Chem., 20: 5-16.
121. Cook, W.H. and D. Basmadjian, 1964. Correlation of adsorption equilibria of pure gases on activated carbon. Can. J. Chem. Eng., 42: 146-151.
122. Nikolaev, K.M. and M.M. Dubinin, 1958. Concerning adsorptional properties of carbon adsorbents 3. A study of adsorption isotherms of gases and vapors on active carbons over a wide interval of temperatures, including the critical region. Russ. Chem. Bull., 7: 1124-1133.
123. Nagel, T., S. Beckert, N. Bottcher, R. Glaser and O. Kolditz, 2015. The impact of adsorbate density models on the simulation of water sorption on nanoporous materials for heat storage. Energy Proceedia, 75: 2016-2112.
124. Aristov, Y.I., I.S. Glaznev, A. Freni and G. Restuccia, 2006. Kinetics of water sorption on SWS-1L (calcium chloride confined to mesoporous silica gel): Influence of grain size and temperature. Chem. Eng. Sci., 61: 1453-1458.
125. Glueckauf, B.Y.E., 1955. Theory of chromatography. Trans. Faraday Soc., 51: 1541-1551.
126. El-Sharkawy, I.I., 2011. On the linear driving force approximation for adsorption cooling applications. Int. J. Refrig., 34: 667-673.
127. Whitaker, S., 1986. Flow in porous media I: A theoretical derivation of Darcy's law. Transp. Porous Media, 1: 3-25.

128. Ergun, S., 1952. Fluid flow through packed columns. Chem. Eng. Prog., 48: 89-94.
129. Solmus, I., D.A.S. Rees, C. Yamali, D. Baker and B. Kaftanoglu, 2012. Numerical investigation of coupled heat and mass transfer inside the adsorbent bed of an adsorption cooling unit. Int. J. Refrig., 35: 652-662.
130. Chua, H.T., K.C. Ng, W. Wang, C. Yap and X.L. Wang, 2004. Transient modeling of a two-bed silica gel-water adsorption chiller. Int. J. Heat Mass Transfer, 47: 659-669.
131. Ng, K.C., H.T. Chua, C.Y. Chung, C.H. Loke, T. Kashiwagi, A. Akisawa and B.B. Saha, 2001. Experimental investigation of the silica gel-water adsorption isotherm characteristics. Applied Thermal Eng., 21: 1631-1642.
132. Alam, K.A., B.B. Saha, Y.T. Kang, A. Akisawa and T. Kashiwagi, 2000. Heat exchanger design effect on the system performance of silica gel adsorption refrigeration systems. Int. J. Heat Mass Transfer, 43: 4419-4431.
133. Mahdavikhah, M. and H. Niazmand, 2013. Effects of plate finned heat exchanger parameters on the adsorption chiller performance. Applied Thermal Eng., 50: 939-949.
134. Saha, B.B., A. Chakraborty, S. Koyama and Y.I. Aristov, 2009. A new generation cooling device employing $CaCl_2$-in-silica gel-water system. Int. J. Heat Mass Transfer, 52: 516-524.
135. Mitra, S., K. Srinivasan, P. Kumar, S.S. Murthy and P. Dutta, 2014. Solar driven adsorption desalination system. Energy Procedia, 49: 2261-2269.
136. Mitra, S., P. Kumar, K. Srinivasan and P. Dutta, 2014. Simulation study of a two-stage adsorber system. Applied Thermal Eng., 72: 283-288.
137. Chua, H.T., K.C. Ng, A. Malek, T. Kashiwagi, A. Akisawa and B.B. Saha, 1999. Modeling the performance of two-bed, sillica gel-water adsorption chillers. Int. J. Refrig., 22: 194-204.
138. Boelman, E.C., B.B. Saha and T. Kashiwagi, 1995. Experimental investigation of a silica gel-water adsorption refrigeration cycle: The influence of operating conditions on cooling output and COP. ASHRAE Trans., 101: 358-366.
139. Chakraborty, A., B.B. Saha and Y.I. Aristov, 2014. Dynamic behaviors of adsorption chiller: Effects of the silica gel grain size and layers. Energy, 78: 304-312.
140. Aristov, Y.I., I.S. Glaznev and I.S. Girnik, 2012. Optimization of adsorption dynamics in adsorptive chillers: Loose grains configuration. Energy, 46: 484-492.
141. Allouhi, A., T. Kousksou, A. Jamil and Y. Zeraouli, 2014. Modeling of a thermal adsorber powered by solar energy for refrigeration applications. Energy, 75: 589-596.
142. Freni, A., G. Maggio, F. Cipiti and Y.I. Aristov, 2012. Simulation of water sorption dynamics in adsorption chillers: One, two and four layers of loose silica grains. Applied Thermal Eng., 44: 69-77.
143. Demir, H., M. Mobedi and S. Ulku, 2009. Effects of porosity on heat and mass transfer in a granular adsorbent bed. Int. Commun. Heat Mass Transfer, 36: 372-377.
144. Riffel, D.B., U. Wittstadt, F.P. Schmidt, T. Nunez, F.A. Belo, A.P. Leite and F. Ziegler, 2010. Transient modeling of an adsorber using finned-tube heat exchanger. Int. J. Heat Mass Transfer, 53: 1473-1482.
145. Sun, L.M., N.B. Amar and F. Meunier, 1995. Numerical study on coupled heat and mass transfers in an absorber with external fluid heating. Heat Recovery Syst. CHP, 15: 19-29.
146. Narayanan, S., X. Li, S. Yang, I. McKay, H. Kim and E.N. Wang, 2013. Design and optimization of high performance adsorption-based thermal battery. Proceedings of the Heat Transfer Summer Conference Collocated with the ASME 7th International Conference on Energy Sustainability and the ASME 2013 11th International Conference on Fuel Cell Science, Engineering and Technology July 14-19, 2013, ASME.,.
147. Narayanan, S., S. Yang, H. Kim and E.N. Wang, 2014. Optimization of adsorption processes for climate control and thermal energy storage. Int. J. Heat Mass Transfer, 77: 288-300.
148. Narayanan, S., X. Li, S. Yang, H. Kim, A. Umans, I.S. McKay and E.N. Wang, 2015. Thermal battery for portable climate control. Applied Energy, 149: 104-116.
149. Nunez, T., 2001. Charakterisierung und Bewertung von Adsorbentien fur Warmetransformationsanwendungen. Ph.D. Thesis, Fakultat fur Physik, Universitat Freiburg, Freiburg, Germany.
150. Tatsidjodoung, P., N. Le Pierres, J. Heintz, D. Lagre, L. Luo and F. Durier, 2016. Experimental and numerical investigations of a zeolite 13X/water reactor for solar heat storage in buildings. Energy Conv. Manage., 108: 488-500.
151. Hu, P., J.J. Yao and Z.S. Chen, 2009. Analysis for composite zeolite/foam aluminum-water mass recovery adsorption refrigeration system driven by engine exhaust heat. Energy Convers. Manage., 50: 255-261.
152. Critoph, R.E., 1996. Evaluation of alternative refrigerant-adsorbent pairs for refrigeration cycles. Applied Thermal Eng., 16: 891-900.
153. Weber, R., H. Kerskes and H. Druck, 2014. Development of a combined hot water and sorption store for solar thermal systems. Energy Procedia, 48: 464-473.
154. Gorbach, A., M. Stegmaier and G. Eigenberger, 2004. Measurement and modeling of water vapor adsorption on zeolite 4A-Equilibria and kinetics. Adsorption, 10: 29-46.
155. Nakaso, K., Y. Tanaka, S. Eshima, S. Kobayashi and J. Fukai, 2015. Performance of a novel steam generation system using a water-zeolite pair for effective use of waste heat from the iron and steel making process. ISIJ Int., 55: 448-456.
156. Kamdem, S.M., K. Johannes, F. Kuznik, H. Bouia and J.J. Roux, 2014. Sensitivity analysis of the energy density in a thermo chemical heat storage device. Energy Procedia, 48: 405-412.

157. Restuccia, G., A. Freni and G. Maggio, 2002. A zeolite-coated bed for air conditioning adsorption systems: Parametric study of heat and mass transfer by dynamic simulation. Applied Thermal Eng., 22: 619-630.
158. Freni, A., L. Bonaccorsi, E. Proverbio, G. Maggio and G. Restuccia, 2009. Zeolite synthesised on copper foam for adsorption chillers: A mathematical model. Microporous Mesoporous Mater., 120: 402-409.
159. Amar, N.B., L.M. Sun and F. Meunier, 1996. Numerical analysis of adsorptive temperature wave regenerative heat pump. Applied Thermal Eng., 16: 405-418.
160. Marletta, L., G. Maggio, A. Freni, M. Ingrasciotta and G. Restuccia, 2002. A non-uniform temperature non-uniform pressure dynamic model of heat and mass transfer in compact adsorbent beds. Int. J. Heat Mass Transfer, 45: 3321-3330.
161. Maggio, G., A. Freni and G. Restuccia, 2006. A dynamic model of heat and mass transfer in a double-bed adsorption machine with internal heat recovery. Int. J. Refrig., 29: 589-600.
162. Wu, W.D., H. Zhang and D.W. Sun, 2009. Mathematical simulation and experimental study of a modified zeolite 13X-water adsorption refrigeration module. Applied Thermal Eng., 29: 645-651.
163. Zegnani, A., A. Mhimid, H. Dhahri and K. Slimi, 2010. New modeling approach for heat and mass transfers during sorption phenomena in a plane adsorber. J. Porous Media, 13: 1087-1100.
164. Nagel, T., S. Beckert, C. Lehmann, R. Glaser and O. Kolditz, 2016. Multi-physical continuum models of thermochemical heat storage and transformation in porous media and powder beds: A review. Applied Energy, 178: 323-345.