# Asian Journal of Scientific Research

ISSN 1992-1454

science alert
http://www.scialert.net

ANSInet
an open access publisher
http://ansinet.com

Asian Journal of Scientific Research 1 (4): 403-411, 2008
ISSN 1992-1454


# A Hybrid Genetic Algorithm for Optimal Power Flow Incorporating FACTS Devices

K. Vijayakumar and R.P. Kumudinidevi
School of Electrical and Electronics Engineering, College of Engineering,
Guindy, Anna University, Tamil Nadu, India

**Abstract:** This study presents an alternate algorithm to solve the Optimal Power Flow problem incorporating Flexible AC Transmission System Devices (FACTS) in a multi machine power system using Genetic Algorithm. Using the proposed method, the location, their type and rating of FACTS devices are optimized simultaneously. Among the various FACTS devices, Thyristor Controlled Series Compensator and Unified Power Flow Controller are considered. The proposed algorithm is used for finding the optimal choice and allocation of FACTS devices, such that the overall system cost which comprises of generation cost and investment cost of FACTS devices are minimized.

**Key words:** Optimal power flow, flexible AC transmission system, genetic algorithm, Newton Raphson's power flow method

## INTRODUCTION

In present days with the deregulation of electricity market, the traditional practices of power system have been completely changed. The parameters such as transmission line impedances, terminal voltages and voltage angle can be controlled by Flexible AC Transmission System (FACTS) devices in an efficient way. Better utilization of the existing power system resources to increase capabilities by installing FACTS devices (Gerbex *et al*., 2001; Lie and Deng, 1997) with economic cost becomes essential.

The benefits brought about FACTS include improvement of system dynamic behavior and enhancement of system reliability. However, their main function is the power flow control as ordered (Duan *et al*., 2000; Chung and Li, 2001).

A few works (Gyugyi *et al*., 1995) were done on the impact of FACTS devices on improving static performance of the power system. There is also a great need for studying the impact of FACTS devices on optimal power flow. The investment costs of FACTS devices and their impact on the power generation cost were also reported (Gyugyi *et al*., 1999). Many researches were made on the optimal choice and the location of FACTS devices (Patemi *et al*., 1999). But optimal choice, location and rating of FACTS devices combined with optimal generation is not done so far.

The objective of this study is to develop an algorithm to simultaneously find the real power allocation of generators and to choose the type and the best location of FACTS devices such that overall cost function which includes the generation cost of power plants and investment costs of FACTS are minimized. The combinatorial analysis is solved using Hybrid Genetic Algorithm.

**Corresponding Author:** K. Vijayakumar, School of Electrical and Electronics Engineering, College of Engineering, Guindy, Anna University, Tamil Nadu, India

## MATERIALS AND METHODS

Among the various FACTS devices, Thyristor Controlled Series Compensator (TCSC) and Unified Power Flow Controller (UPFC) are considered in this paper. Because the two devices are better than other FACTS devices for controlling power flow in the system. The detailed models for these two devices are discussed here.

### TCSC

The TCSC can serve as the capacitive or inductive compensation respectively by modifying the reactance of the transmission line (Noroozian and Anderson, 1997). In this study, the reactance of the transmission line is adjusted by TCSC directly. The rated value of TCSC is a function of the reactance of the transmission line, where the TCSC is located.

$$X_{ij} = X_{Line} + X_{TCSC},\ X_{TCSC} = r\ tcsc.\ X_{line} \tag{1}$$

Where:

$X_{line}$ = Reactance of the transmission line

$X_{TCSC}$ = Reactance of TCSC and rtcsc is the coefficient which represents the compensation degree of TCSC

To avoid over compensation, the working range of the TCSC is between -0.7 $X_{line}$ and 0.2 $X_{line}$.

$$r\ tcsc_{min} = -0.7,\ r\ tcsc_{max} = 0.2 \tag{2}$$

### UPFC

The UPFC is a combination of shunt and series controller (Gyugyi *et al*., 1995). It has three controllable parameters namely, the magnitude of the boosting injected voltage ($U_T$), phase of this voltage ($Ø_T$) and the exciting transformer reactive current ($I_q$).

When an UPFC is installed in the power system as shown in Fig. 1 with the exciting transformer of UPFC directly counected to bus l. In Fig. 1, $Z_{lm}$ and $Y_{lm}$ denote the parameters of transmission line l-m. $Y_l$ and $Y_m$ denote the respective shunt admittance for bus l and bus m.

When the UPFC is placed in the transmission line counected between node l and m, the load flow equations can be expressed as follows (Wanliang and Ngan, 1997).

$$P_{Gi} - P_{Li} = \sum_{j \in i} U_i U_j (G_{ij} \cos\delta_{ij} + B_{ij} \sin\delta_{ij}) \tag{3}$$

$$Q_{Gi} - Q_{Li} = \sum_{j \in i} U_i U_j (G_{ij} \sin\delta_{ij} - B_{ij} \cos\delta_{ij}) \tag{4}$$

$$i = 1, 2. . . . n;\ \text{but}\ i \neq l, m$$

$$P_{Gl} - P_{Ll} = \sum_{j \in i} U_l U_j (G_{lj} \cos\delta_{lj} + B_{il} \sin\delta_{lj}) + \Delta P_l \tag{5}$$

$$Q_{Gl} - Q_{Ll} = \sum_{j \in i} U_l U_j (G_{lj} \sin\delta_{lj} + B_{lj} \cos\delta_{lj}) + \Delta Q_l \tag{6}$$

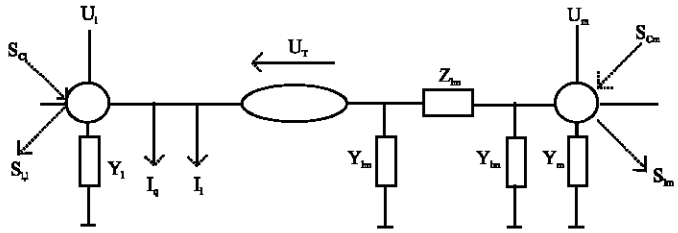


Fig. 1: UPFC connected between node l and m, with exciting transformer at node l

$$P_{Gm} - P_{Lm} = \sum_{j \in i} U_m U_j (G_{mj} \cos\delta_{mj} + B_{mj} \sin\delta_{mj}) + \Delta P_m \tag{7}$$

$$Q_{Gm} - Q_{Lm} = \sum_{j \in i} U_m U_j (G_{mj} \sin\delta_{mj} - B_{mj} \cos\delta_{mj}) + \Delta Q_m \tag{8}$$

Where:

| | | |
|---|---|---|
| n | = | Total No. of nodes of the power system |
| $P_{Gi}$, $Q_{Gi}$, $P_{Li}$ and $Q_{li}$ | = | The respective real and reactive power of generator and load of node i |
| $U_i$ and $\delta_i$ | = | The respective magnitude and phase angle of the voltage at node i |
| | | $j \in i$ signifies that bus j is connected to bus i |
| $\delta_{ij}$ | = | $\delta_i$-$\delta_j$ |
| $G_{ij}$ and $B_{ij}$ | = | The respective real part and imaginary part of $Y_{ij}$, where $Y_{ij}$ represents the elements of the network admittance matrix without UPFC |
| $\Delta P_l$, $\Delta Q_l$, $\Delta P_m$ and $\Delta q_m$ | = | The modified real and reactive power injections at bus l and m due to the placement of UPFC |

The modification formulae for real and reactive powers can then be written as:

$$\Delta P_l = -U_m U_T [G \cos(\delta_m - \phi_T) - B \sin(\delta_m - \phi_T)] + G_F U_T^2 + 2U_l U_T G_F \cos(\delta_l - \phi_T) \tag{9}$$

$$\Delta Q_l = U_m U_T [G_F \sin(\delta_l - \phi_T) - B_F \cos(\delta_l - \phi_T)] - U_l I_q \tag{10}$$

$$\Delta P_m = -U_m U_T [G\cos(\delta_m - \phi_T) + B\sin(\delta_m - \phi_T)] \tag{11}$$

$$\Delta Q_m = -U_m U_T [G\sin(\delta_m - \phi_T) - B\cos(\delta_m - \phi_T)] \tag{12}$$

Where:

$G + jB = 1/Z_{lm}$; $G_F = g_{lm} + G$

$B_F = b_{lm} + B$; $Y_{lm} = g_{lm} + jb_{lm}$

The injected voltage of UPFC has a maximum voltage magnitude of $0.1V_m$, where, $V_m$ is the rated voltage of the transmission line where UPFC is installed. The angle of the UPFC can be varied from -180 to +180°.

The objective of this study is to find simultaneously the optimal generation, optimal choice and location of FACTS devices so as to minimize the overall cost function, which comprises of generation cost and investment costs of FACTS devices. The generation cost function is represented by a quadratic polynomial as follows:

$$C_2(P_G) = \alpha_0+\alpha_1 P_G+\alpha_2 P_G^2 \tag{13}$$

Where:

$P_G$ = The output of the generator (MW)
$\alpha_0$, $\alpha_1$ and $\alpha_2$ = Cost coefficients

Based on the Siemens AG Database (Habur and Oleary), the cost functions for TCSC and UPFC are developed. The cost functions for UPFC and TCSC are:

$$C_{1UPFC} = 0.0003S^2 - 0.2691S + 188.22 \text{ (US\$/kVar)} \tag{14}$$

$$C_{1TCSC} = 0.0015S^2 - 0.7130S + 153.75 \text{ (US\$/kVar)} \tag{15}$$

where, $C_{1UPFC}$ and $C_{1TCSC}$ are in US$/kVar and S is the operating range of the FACTS devices in MVar.

The cost function for TCSC and UPFC are shown in Fig. 2.

**Optimal Power Flow with FACTS Devices**

The problem formulation for the optimal power flow with FACTS devices can be expressed as follows:

$$\text{To minimize } C_{Total} = C_1(f) + C_2(P_G) \tag{16}$$

$$\text{Subjected to } E(f, g) = 0 \tag{17}$$

$$B_1(f) < b_1,\ B_2(g) < b_2 \tag{18}$$

Where:

$C_{Total}$ = The overall cost objective function which includes the average investment costs of FACTS devices $C_1(f)$ and the generation cost $C_2(P_G)$
E (f, g) = The conventional power flow equations
$B_1(f)$ and $B_2(g)$ = The inequality constraints for FACTS devices and the conventional power flow, respectively

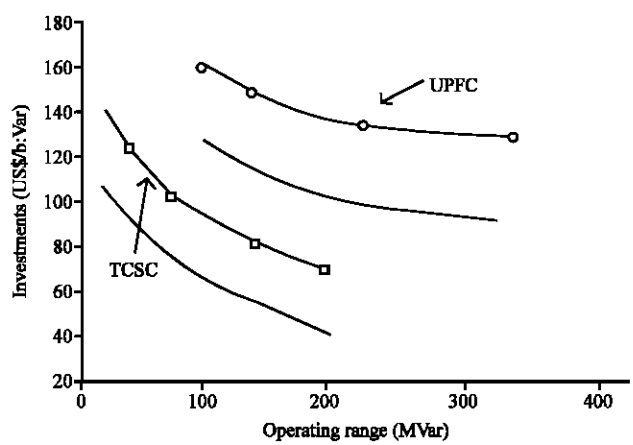


Fig. 2: Cost functions of the FACTS Devices: TCSC and UPFC

f and $P_G$ = Vectors that represent the variables of FACTS devices and the active power outputs of the generators

g = Represents the operating state of the power system

The generation cost is in US$/Hour and the investment costs of FACTS devices are in US$. Both should be in same unit US$/Hour. Normally the FACTS devices will be in service for many years. However only a part of its life time is employed to regulate the power flow. In this study three years are employed to evaluate the cost function. Therefore the average value of the investment costs are calculated as follows

$$C_1 (f) = C (f)/\{8760\times3\} \tag{19}$$

As mentioned earlier, the power system parameters can be changed using FACTS devices. These different parameters derive different results on the objective function. The use of different FACTS devices locations and its types have also influence on the objective function. So it is not easy to use the conventional optimization methods to this problem. Therefore to solve this problem, a hybrid genetic algorithm is employed.

Hybrid genetic algorithm is the combined use of Genetic Algorithm and Newton Raphson's Power Flow.

## GENETIC ALGORITHM

Gas are global search techniques based on the mechanism of natural selection and genetics. Without any prior knowledge of the objective function they can search several possible solutions simultaneously. GAs are best suited for complex problems. Moreover it produces high quality solution.

Gas start with random generation of initial population and then the selection, crossover and mutation are proceeded until best population is found. GAs are simple and practical algorithm and easy to be implemented in power system.

### Encoding

The objective is to find simultaneously the optimal generation, optimal choice and location of FACTS devices subjected to equality and ineqnality constraints. Therefore the configuration of FACTS devices is encoded by four parameters: active power outputs of generator, type, location and rating of FACTS devices. The first value of each string corresponds to the active power outputs of generator, second value of each string represents the location and the third value of each string represents the type of FACTS devices: 1 for TCSC, 2 for UPFC and 0 for No device. The last value of each string (rf) represents the rated value of FACTS device. This value ranges between -1 and +1. The real value of each FACTS device is then converted according to the device as discussed earlier.

### TCSC

It possesses working ranges between -0.7 $X_{Line}$ and 0.2 $X_{Line}$. Therefore rf is converted into real degree of compensation (rtcsc) using the relation rtcsc= rf x 0.45 - 0.25.

### UPFC

It has an injected voltage magnitude of 0.1 $V_m$ and the angle of the injected voltages varies between -180 and +180°. Therefore rf is converted into the working angle range rupfc, using the relation, rupfc = rf x 180°.

**Initial Population**

For each population string, the first value represents a set of generators real power output which is randomly selected. The second value represents the type of FACTS devices which is obtained by randomly drawing number among the selected devices (1, 2 and 0). The third value of each string represents the location of FACTS devices in the transmission line which is also randomly selected among the existing number of transmission lines in the system. The fourth value in the string represents the rating of the FACTS devices which is again a randomly selected value between -1 and +1.

**Decoding**

The parameters of the initial population are then decoded to actual values. Then for a given load demand, the Newton Raphson's power flow is performed as done by Wanliang and Ngan (1997).

$$\begin{bmatrix} H & N \\ J & L \end{bmatrix} \begin{bmatrix} \Delta\delta \\ \Delta V / V \end{bmatrix} = \begin{bmatrix} \Delta P \\ \Delta Q \end{bmatrix} \tag{20}$$

After convergence of power flow, the voltage magnitudes and phase angles of the bus voltages are known. Using this real power loss ($P_L$) is calculated using the Eq. 21;

$$P_L = \sum_{i=1}^{n}\sum_{j=1}^{n}(P_i\alpha_{ij}P_j + Q_i\alpha_{ij}Q_j - P_i\beta_{ij}Q_j + P_j\beta_{ij}Q_i) \tag{21}$$

$$\alpha_{ij} = \frac{r_{ij}\cos(\delta_i - \delta_j)}{|v_i|.|v_j|} \tag{22}$$

$$\beta_{ij} = -\frac{r_{ij}\sin(\delta_i - \delta_j)}{|v_i|.|v_j|} \tag{23}$$

Where:

$r_{jk}$ = The real components of the elements of the bus impedance matrix
n = The No. of buses
$P_i$ and $Q_i$ = The real power and reactive power at bus i, respectively
$V_i$ and $\delta_i$ = The magnitude and angle of the voltage at bus i, respectively

**Fitness Function**

After encoding, the objective function (fitness) is evaluated for each individual of the population. The fitness is a measure of quality which is used to compare different solutions. In this paper fitness is defined as follows:

$$\text{Fitness} = \frac{1}{C_{Total} + W(\sum_{i}^{N} P_{Gi} - P_{Di} - P_{Li})} \tag{24}$$

Since the GAs can only find the maximum value of the objective, so inverse function is selected to convert the objective function into a maximum one.

**Reproduction**

Reproduction is a process where the individual is selected to move to a new generation according to its fitness. The biased roulette wheel selection is employed. The probability of an individual's reproduction is proportioual to its part on the biased roulette wheel.

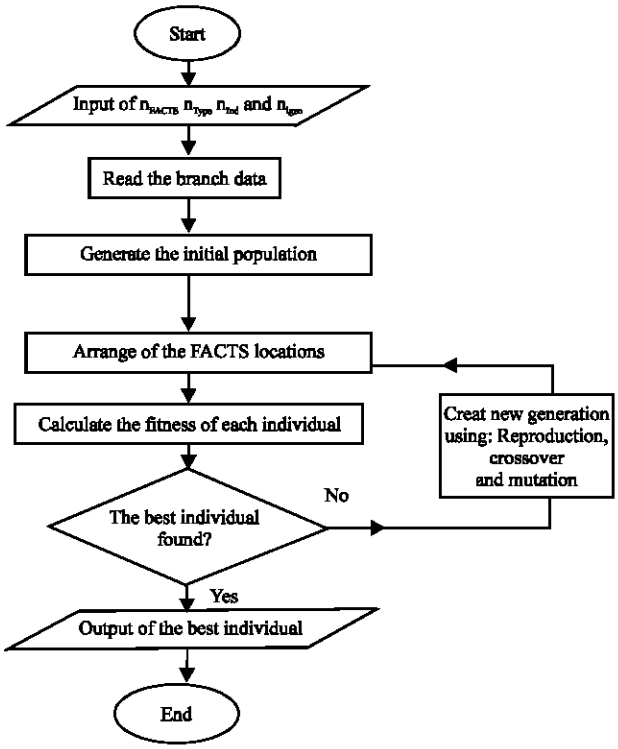


Fig. 3: Flow chart for genetic algorithm optimization

**Crossover**

The main objective of crossover is to reorganize the information of two different individuals and to produce a new one. A single point crossover is applied and probability of crossover is selected as 1.0.

**Mutation**

Mutation is used to introduce some sort of artificial diversification in the population to avoid premature convergence to local optimum.. The above-mentioned operations of selection, crossover and mutation are repeated until the best individual is found. The flowchart for Genetic algorithm is given in Fig. 3.

## RESULTS AND DISCUSSION

A Visual C++ coding is developed for Genetic Algorithm. In order to verify the developed method, IEEE 9 bus system is used. IEEE 9 bus system comprises of three generator buses and five load buses as shown in Fig. 4. Different operating conditions are considered for finding the optimal choice and location of FACTS devices.

The total population size is selected as 150, the mutation probability as 0.01 and crossover probability as 1.0.

**Case 1**

For the normal loading of IEEE 9 bus system, it has been found that no FACTS devices are required. The generators outputs are 167.176, 69.137 and 82.392 MW, respectively.

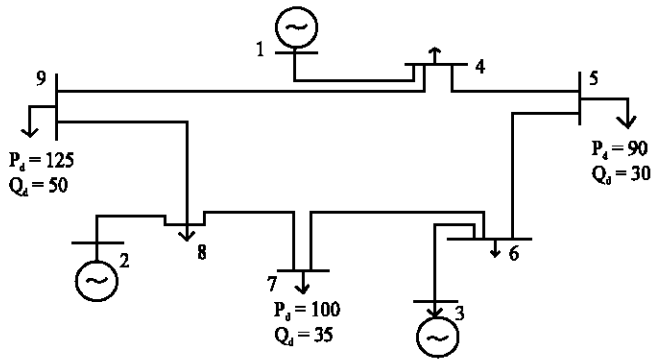


Fig. 4: IEEE 9 bus system

Table 1: Optimal, choice, location and rating of FACTS devices

| Bus | Loading | Rating (MVar) | Location | Type | Remarks |
|---|---|---|---|---|---|
| 5 | Normal loading | 0.00 | - | No device | - |
| 5 | 2 times the normal loading | 10.166 | line 3 | TCSC | Line 3 connects 5th and 6th bus |
| 5 | 3 times the normal loading | 17.977 | line 4 | TCSC | Line 4 connects 3rd and 6th bus. 6th bus is connected directly to 5th bus |
| 5 | 3 times the normal loading and without generation at bus 3 | 156.020 | line 4 | UPFC | Line 4 connects 3rd and 6th bus. 6th bus is connected directly to 5th bus |
| 9 | Twice normal loading | 62.989 | line 2 | TCSC | Line 2 connects 4th and 5th bus. 4th and 9th bus are directly connected |
| 9 | 3 times the normal loading | 96.038 | line 2 | UPFC | Line 2 connects 4th and 5th bus. 4th and 9th bus directly connected |
| 9 | Twice normal loading and without generation at bus 2 | 47.520 | line 6 | UPFC | 6th line connects buses 7 and 8. 8th bus is connected to 9th bus |

**Case 2**

When the loading at bus 5 is increased twice, it is found that TCSC is selected at transmission line 3. The reactive power compensation (Var compensation) required is 10.166 MVar. The generators outputs are 223.65, 88.92 and 102.78 MW, respectively.

**Case 3**

When the loading at bus 5 is increased three times and removing the generation at bus 3 it has been found that UPFC is selected in the transmission line 4 and Var compensation required is 156.02 MVar. The generators outputs are 245.34, 263.69 and 0 MW, respectively.

The loadings on the IEEE 9 bus system are varied for different values and the type of device required, their location and ratings are found. and are shown in Table 1. This algorithm can be used easily to the real time system for varying load conditions. It can be used even for complex system without any changes in the algorithm.

## CONCLUSIONS

In this study, a genetic algorithm based optimal power flow is proposed to determine the active power generation of generators, the type of FACTS device, its optimal location and rating of the devices in power systems such that the overall system cost is minimized. The overall system cost includes generation cost of power plants and the investment costs of FACTS devices.

## REFERENCES

Chung, T.S. and Y.Z. Li, 2001. Hybrid GA for OPF with consideration of FACTS devices. IEEE. Power Eng. Rev., 21 (2): 47-57.

Duan, X., J. Chen, F. Peng, Y. Luo and Y. Huang, 2000. Power flow control with FACTS devices. IEEE. Trans. Power Syst., 15 (2): 1585-1589.

Gerbex, S., R. Cherkaoui and A.J. Germond, 2001. Optimal location of multiple type FACTS devices in a power system by means of genetic algorithm. IEEE. Trans. Power Syst., 16 (3): 537-544.

Gyugyi, L., C.D. Schauder and S.L. Williams *et al*., 1995. The unified power flow controller: A new approach to power transmission control. IEEE. Trans. Power Delivery, 10 (2): 1085-1097.

Gyugyi, L., C.D. Schauder and S.L. Williams *et al*., 1999. Optimal placement of FACTS controller in power system by a genetic based algorithm. In: Proceedings of IEEE International Conference on Power Electronics and Drive and Systems, Hong Kong.

Lie, T.T. and W. Deng, 1997. Optimal Flexible AC Transmission Systems (FACTS) devices allocation. Elect. Power Energy Syst., 19 (2): 125-134.

Noroozian, M. and G. Anderson, 1997. Power flow control by use of controllable series components. IEEE. Trans. Power Delivery, 12 (4): 1629-1634.

Patemi, P., S. Vitet, M. Bena and A. Yokoyama, 1999. Optimal location of phase shifters in French network by genetic algorithm. IEEE. Trans. Power Syst., 14 (1): 37-42.

Wanliang, F. and H.W. Ngan, 1997. Extension of Newton Raphson's load flow techniques to cover multi unified power flow controllers. In: The Proceedings of the 4th International Conferences on Advances in Power System Control Operation and Management, Hong Kong.