Asian Journal of Scientific Research

ISSN 1992-1454

science alert
http://www.scialert.net

ANSInet
an open access publisher
http://ansinet.com

Asian Journal of Scientific Research 1 (4): 451-457, 2008
ISSN 1992-1454
© 2008 Asian Network for Scientific Information

Development of an Automated Transplanter for the Gantry System

[1]W.I. Wan Ishak, [2]M.A. Awal and [1]R. Elango
[1]Faculty of Engineering, Universiti Putra Malaysia, 43400, Selangor, Malaysia
[2]Department of Farm Power and Machinery,
Bangladesh Agricultural University, Mymensingh, Bangladesh

Abstract: This study was carried out to create a new method of transplanting for various types of vegetables. An automated transplanter has been designed, developed and tested to be integrated with the main Gantry System in a greenhouse. The method was used by using the latest concepts using the jiffy peat pot (biodegradable). A Cartesian Configuration was used for the seed transplanter movement system which operates in a 3-axis format. The Auto CAD 2002 software was used to develop a 3D concept design of the proposed transplanter. The transplanter used electricity as its power supply. This machine consisted of a quick attach 3 point hitch, an X-axis module, a Z-axis module, an auger, a pot tray, a gripper and a watering unit. The transplanter operated automatically using a Graphical User Interface developed by Visual Basic 6.0 software. A stepper motor and a DC motor were used to drive the axes module. It was configured to integrate with the control system software which was developed by using FP WIN GR software and then downloaded to the Nais FP2 PLC, as hardware of the system.

Key words: Transplanter, gantry system, automation, agriculture operation

INTRODUCTION

The major goal of mechanized planting operations in the field is to give higher work rates or lower labor requirements than manual planting. Hand-planting is an intensive farm operation and has created major delays in planting operations, especially when there is a shortage of labor. The number of farmers is decreasing in many countries in the world, because agriculture is not attractive to the younger generation compared with the secondary and tertiary industries. Many agricultural operations have been mechanized but the number of operators is decreasing. Thus an automated operating system must be developed so that one person can operate multiple machines. Now our challenges are to solve the above problems in the agricultural systems and to construct new bio-production systems through engineering methodologies.

Robots in agriculture are still new. The agriculture industry is behind other industries in using robots because the jobs involved in agriculture are difficult or not straightforward and may be repetitive, but they are not exactly the same every time. A gantry robot was built based on the idea of an overhead gantry system which is shown in Fig. 1. The gantry robot has three linear axes of motion and coordinates. The first coordinate, X represents the left and right movements. The second axis, Y describes forward and reverse movements, while the third axis Z is generally used to depict up and down movements. The combination of the Cartesian movement with the mounted machinery means that it will be able to perform all kinds of farm operations. The controller of the gantry robot can operate it by using a computer and Programmable Logic Controller (PLC). User-friendly software was developed to allow the user to set the desired control environment of a farm.

Corresponding Author: Dr. Md. Abdul Awal, Smart Farming Laboratory, Institute of Advance Technology, Universiti Putra Malaysia (UPM), 43400 UPM Serdang, Selangor D/E, Malaysia
Tel: 006-016277928

Fig. 1: Overhead gantry system

The robotic transplanter needs to be designed differently from an industrial robot because it operates on biological seedlings of variable sizes, shapes, colours, positions and orientations. These non-uniform working conditions are quite different from those of the industrial robot, which deals with uniform objects in a defined spatial configuration. When designing a robotic transplanter, the important variables which must be considered for each crop are: the species of the crop, the growth stage, the type of seedling jiffy peat pot and the growth media used (Ryu *et al*., 2001). Research for the development of a robotic transplanter and its components began several years ago. Hwang and Sistler (1986) developed a commercial pepper transplanter using a basic robotic manipulator. Simonton (1991) developed an end-effector for the handling and manipulating of geranium cuttings. He controlled the position, velocity and force of the end-effector to minimize damage to the petioles and main stems. An end-effector which utilized a rack and pinion mechanism was developed by Kim *et al*. (1995). The end-effector converted the rotational motion of the stepping motor to the clipping motion of the finger. Ting *et al*. (1990) developed a needle type of end-effector operated by pressurized air which was used for a wide range of seedling shapes and sizes. Kutz *et al*. (1987) used a computer graphics system to simulate the transplanting operation of an industrial robot. In this study a computer program was developed for controlling the transplanter. The main objectives of this study were to introduce an automatic transplanter in the Gantry System and to develop a computer program to automate the transplanter using Visual Basic (VB) and Programming Logic Control (PLC) for the transplanting operation.

MATERIALS AND METHODS

The research was conducted at Smart Farming Technology Laboratory, Institute of Advance Technology, Universiti Putra Malaysia (UPM) in 2006. The research activities were divided into four major parts. Part I consisted of all activities involved during the development of the hardware, which included the end-effector construction and the installation of elements such as a stepper motor, a DC motor, an auger and a watering unit (pump). Part II was for the development of the control circuit i.e., the development of a ladder diagram to control the movement of the transplanter. Part III consisted of the interfacing method between the control circuits and the computer by using the PLC. Part IV was for the software development using the Visual Basic program to communicate with the PLC.

The hardware design of this machine can be divided into the mechanical design and the electrical design. The mechanical design refers to the design and fabrication of the automated transplanter. It

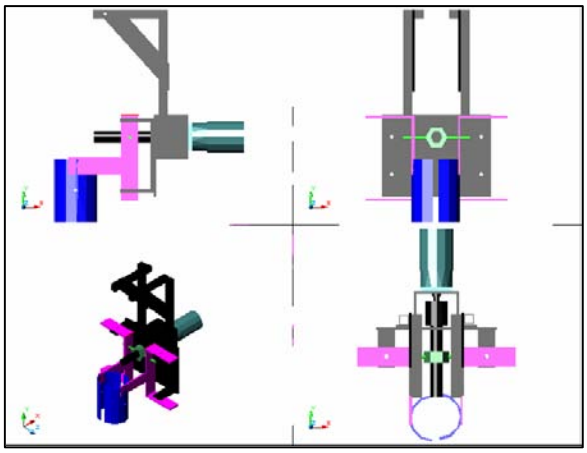

Fig. 2: The gripper

consisted of 6 main sections namely a quick attach 3 point hitch frames, a manipulator, a seedling tray, an auger, a spraying unit and a gripper. The function of the 3 point hitch was to attach the implement/manipulator and end-effector to the gantry system. The size of the 3 point hitch was 265×265 mm. The main frame was designed to carry the manipulator and end-effectors. The size of the main frame was 340×350×380 mm. The gripper consisted of an arm and a gripper. The function of the gripper was to pick the peat pot from the pot tray and place it into the hole and to compact the soil after the transplanting was done. The DC motor was installed to activate the gripper open and close movements. The design is shown in Fig. 2.

The auger consisted of an arm and an auger drill. The function of the auger was to dig holes for planting. The DC motor was installed to activate the auger. The auger was similar to the commercial auger used to do the soil tests in a laboratory. The electrical design includes the design of the schematics and a wiring diagram of the automated system. They consisted of Programmable Logic Control (PLC), Limit Switches, Stepper Motor and DC motor and relay. The model of the PLC used in this project was NAIS FP2. The programmable logic controller needs to be programmed before tasks are carried out. The ladder diagram was written to control the operation of any automation system. The ladder diagram is an electrical diagram showing the connection between various contacts, relay coils, solenoid, motors etc. The ladder diagram is very easy to learn and logical in its interpretation. In addition to this, the ladder diagram contains internal instructions including a timer, a counter, a sequencer, a math and other data manipulation instructions. The pulses of the motors were inserted into the program to control the distance moved to the desired coordinate on the working area of the gantry robot. A Visual Basic program was developed as a user-friendly interface to communicate with the PLC. Interfacing the visual basic program to FP2 PLC was carried out using ASCII code through communication protocols. The operator can use this program to give instructions to the gantry to perform tasks.

The movement of the gripper was developed based on the Jacobian matrix. The direct kinematics and the reverse kinematics were calculated based on the joint of the gripper body to the gripper arm. Direct kinematics determines position, velocity and acceleration of each link and manipulator end those of each joint. Inverse kinematics determines position, velocity and acceleration of each joint from those of each link and manipulator end (Kondo and Ting, 1998). Detail calculations are as follows:

The calculation of the kinematics manipulation for the transplanter was based on the calculation as shown in Fig. 3 obtains from Kondo and Ting. Figure 3 shows a 2-DOF manipulator with a

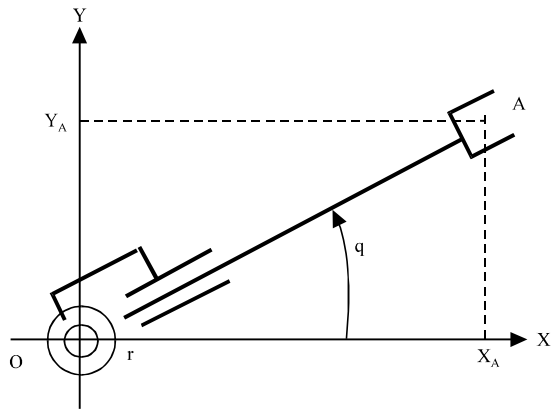

Fig. 3: 2-DOF polar-coordinate manipulator (Adapted from Kondo and Ting, 1998)

prismatic joint and rotational joint. The rotational joint coincides with origin O and its angle is represented q, while displacement of the prismatic joint is represented by r. The manipulator end position $A(x_a, y_a)$ is expressed by:

$$r = \begin{pmatrix} xa \\ ya \end{pmatrix} = \begin{pmatrix} r\cos q \\ r\sin q \end{pmatrix} \tag{1}$$

The inverse problem was solved by:

$$r = (x^2_A + y^2_A)^{1/2} \tag{2}$$

$$q = \tan^{-1} \frac{y_A}{x_A} \tag{3}$$

The velocity problem was soled by differentiating Eq. 1 as

$$r = \begin{pmatrix} \dot{x}_A \\ \dot{y}_A \end{pmatrix} = \begin{pmatrix} \dot{r}\cos q - r\sin q\dot{q} \\ \dot{r}\sin q + r\cos q\dot{q} \end{pmatrix} = \begin{bmatrix} \cos q & -r\sin q \\ \sin q & +r\cos q \end{bmatrix} \begin{pmatrix} \dot{r} \\ \dot{q} \end{pmatrix} = J \begin{pmatrix} \dot{r} \\ \dot{q} \end{pmatrix} \tag{4}$$

where, Jacobian matrix J can be expressed by following way

$$J = \begin{pmatrix} \frac{\partial x}{\partial r} & \frac{\partial x}{\partial q} \\ \frac{\partial y}{\partial r} & \frac{\partial y}{\partial q} \end{pmatrix} \tag{5}$$

RESULTS AND DISCUSSION

The automated transplanter was successfully designed and fabricated as shown in Fig. 4. The concept of automation was also successfully applied to the transplanting robot. The sequence of

Fig. 4: The structure of the transplanter

operations was started by Z-module, moving down to the predetermined vertical distance. The auger was then activated to start drilling. When the auger reaches the required depth, both drivers will stop immediately. The Z-axis arm linkage will then be activated to move up. Next, the X-axis arm linkage module is activated to move to the left side and the gripper to pickup the potted plant. Then the X-axis arm linkage moves to the right side until it reaches the pot hole and stops. The gripper will take action to open and simultaneously release the potted plant. Next the gantry robot is activated to move down until the gripper reaches a depth of 20 mm into the soil. The gantry robot stops while the gripper closes and at the same time compact the soil. Finally, the pump activates to spray the water to the planted potted plant.

The gripper was successfully tested. The gripper was able to grab the potted plant, move to the pot hole and release the potted plant into the pot hole. The gripper was able to open at an average of 4.2 sec and close at an average of 6.3 sec. The gripper was driven by the X-axis arm linkage. The Z-axis arm linkage was able to move down until the gripper reached 20 mm depth into the soil. The Z-axis module took an average of 55 sec to move up and an average of 51 sec to move down. The gripper was also tested and was found to be able to compact the soil. The automation system can be manually operated or controlled by a computer program. In this project, Microsoft Visual Basic was used. The main function of the Visual Basic application was to set the coordinates for each plant. Figure 4 shows the graphical user interface developed by using Microsoft Visual Basic. While the monitoring button is clicked, the selection form will be loaded as shown in Fig. 5. In this form, the user has to select the types of crop to be planted. The descriptions of the selected crop will be shown after the crop is confirmed. After the crop is selected, then the operator selects the type of operation to be carried out. When the operator selects the transplanting operation, then the transplanting control icon will then be loaded as shown in Fig. 6. Therefore, in this form, the communication between the visual basic program and the controller is necessary whenever data are sent and received.

The transplanting control icon was developed to be controlled either by an automatic or manual click at the Mode function. When the operator clicks the automatic button, the gantry will move automatically to the coordinate system developed by the authors in the Visual Basic. If the operator selects the manual button, the operator can control the gantry robot manually. The stop button was developed for emergency purposes. When the stop button is clicked, the will operations stop immediately.

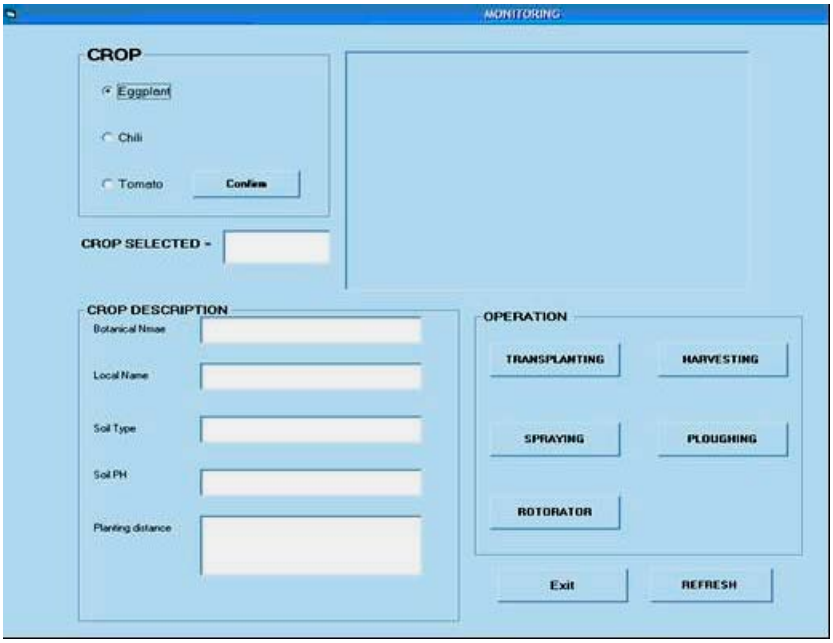

Fig. 5: Selection form

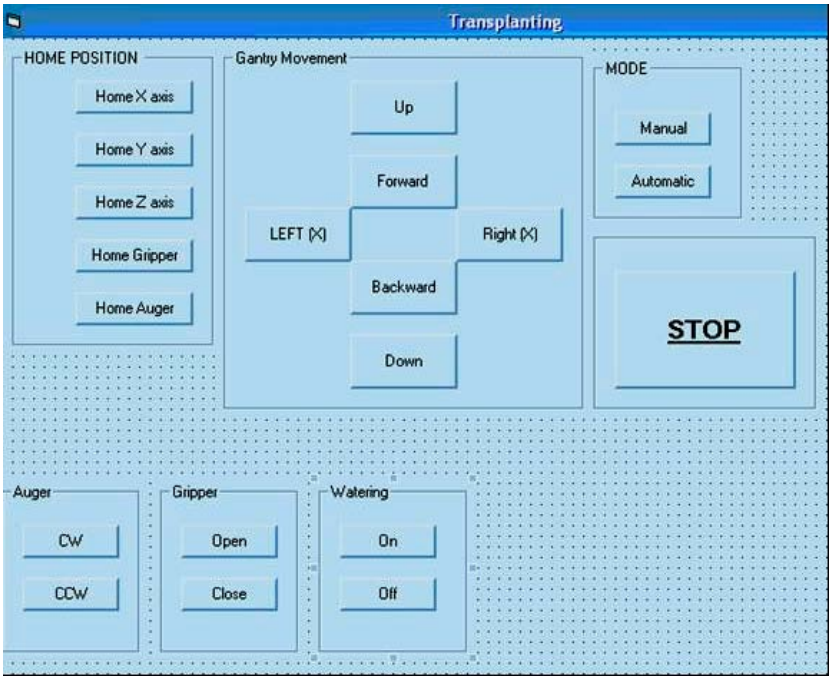

Fig. 6: Transplanting control icon

CONCLUSION

The automated transplanter was designed, developed and tested to be integrated to the main Gantry System in a greenhouse. The method used the latest concepts of the jiffy peat pot (biodegradable). A Cartesian Configuration for the gantry system was used for the seed transplanter movement system which operates in a 3-axis format. The objectives of this project were to design and develop the suitable transplanter to be attached to the available Gantry System and to develop a computer program to automate the transplanter. The transplanter manipulator has been successfully designed and fabricated. The average time taken by the Z-axis arm linkage module was 51 sec for down ward movement and 55 sec for up ward movement. The auger used a 12V DC motor for the drilling action and the depth of drilling was 80 mm. The average time taken by the gripper was 4.2 sec to open and 6.3 sec to close. The watering unit used a 12 V pump to spray water. The time taken to spray water was fixed at 10 sec and the amount of water sprayed was 100 mL. The PLC ladder diagram was developed to operate the transplanter. The Visual Basic program was also developed to monitor and position the transplanter to the coordinates for transplanting. The average time taken to transplant an eggplant potted plant was 2 min 35.5 sec.

ACKNOWLEDGMENTS

The authors are grateful to Ministry of Science, Technology and Iunovation, Malaysia for financial support to carry out this study.

REFERENCES

Hwang, H. and F.E. Sistler, 1986. A robotic pepper transplanter. Applied Eng. Agric., 2 (1): 2-5.

Kim, K.D., S. Ozaki and T. Kojima, 1995. Development of an automatic robot system for a vegetable factory. I. Transplanting and raising seedling robot in a nursery room. Proceedings of ARBIP 95, Kobe, Japan, 1: 157-163.

Kondo, N. and K.C. Ting, 1998. Robotics for bio-production systems. The Society for Engineering in Agricultural, Food and Biological Systems, 2950 Niles Road, St Joseoh MI 49085-9659 USA., pp: 56-57.

Kutz, K.C., G.A. Miles, P.A. Hammer and G.W. Krutz, 1987. Robotic transplanting of bedding plants. Trans. Am. Soc. Agric. Biol. Eng., 30 (3): 586-590.

Ryu, K.H., G. Kim and J.S. Han, 2001. Development of a robotic transplanter for bedding plants. J. Agric. Eng. Res., 78 (2): 141-146.

Simonton, W., 1991. Robotic end-effector for handling greenhouse plant material. Trans. Am. Soc. Agric. Biol. Eng., 34 (6): 2615-2621.

Ting, K.C., G.A. Giacomelli, S.J. Shen and W.P. Kabala, 1990. Robot workcell for transplanting of seedlings. Part II: End-effector development. Trans. Am. Soc. Agric. Biol. Eng., 33 (3): 1013-1017.