http://ansinet.com/itj

ITJ

ISSN 1812-5638

INFORMATION TECHNOLOGY JOURNAL

ANSInet
Asian Network for Scientific Information
308 Lasani Town, Sargodha Road, Faisalabad - Pakistan

Information Technology Journal 12 (20): 5830-5834, 2013
ISSN 1812-5638 / DOI: 10.3923/itj.2013.5830.5834
© 2013 Asian Network for Scientific Information

Application of Svpwm in New Type Permanent Magnet Synchronous Motor Based on Agv

[1,2]Zhang Haoming and [2]Wang Yinghai
[1]Department of Electrical and Information Engineering, Tongling University, Anhui Province, Tongling, 214000, China
[2]School of Electrical and Information Engineering, SIPIVT, Jiangsu Province, Suzhou,215123, China

Abstract: In order to meet the special requirements of AGV for motor: Small torque ripple in low speed, a amooth starting, high efficiency and high power density, new permanent magnet motor-Halbach motor was introduced. SVPWM was realized based on DSP TMS320F2812, experimental results show that the SVPWM control strategy can effectively control Halbach motor and improve the dynamic performance of the AGV system.

Key words: Automatic guided vehicle, halach motor, SVPWM

INTRODUCTION

In order to realize the automation and intelligent transportation, AGV (Automatic Guided Vehicle) was widely used in flexible production line as the logistics transport tools (Du *et al*., 2008). At present, AGV has gradually penetrated into every area, including tobacco making, household electrical appliance, automobile assembly line, engine testing line, education demonstration system, etc. AGV is different from the ordinary vehicle which has its unique characteristics: high reliability, high flexibility, independence, high compatibility, high security which other vehicles do not have. Generally, AGV has two motor to control its moving, steering motor control its direction and the walking motor controls its speed, power of walking motor is more higher than steering motor. Because of its special use, motor in this system must meet more higher requirements: low torque ripple in low speed to reduce vibration; smooth starting to reduce damage of goods; high efficiency to reduce energy consumption in walking to improve running mileage system; high power density to reduce the volume of the motor; General Motors is difficult to meet the above requirements.

Halbach motor is a new type of permanent magnet synchronous motor, is developed by the famous scholar (Halbach, 1980) its model as shown in Fig. 1.

Compared with common permanent magnet synchronous motor, Halbach motor has the following characteristics: Magnetic field has a sinusoidal distribution which is decided by its structure (Halbach, 1981). The field not only helps to reduce the harmonic of motor torque, improve the performance of the motor but also increase air gap flux density which is beneficial to increase the power density of motor, reduce the volume of the motor. Sometimes, the width of air gap can be increased it is useful to motor's smooth starting; Halbach motor magnetic field almost does not pass through the rotor core, eddy current loss of the rotor is almost zero (Halbach, 1982) which is conducive to improving the efficiency of the system.

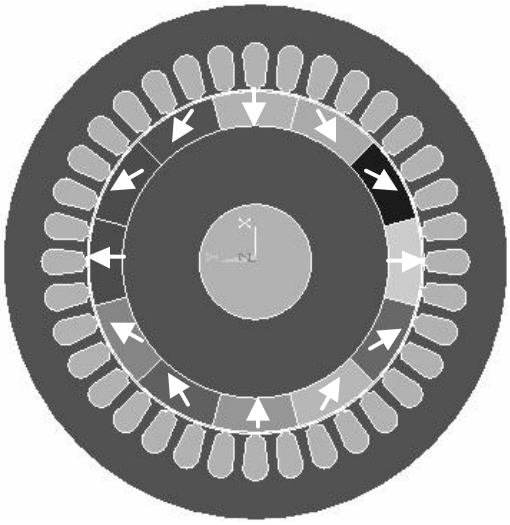

Fig. 1: Halbach motor's 2D model

HALBACH MOTOR'S SVPWM PRINCIPLE

Three-phase Halbach motor PWM inverter principle is shown as Fig. 2.

Corresponding Author: Zhang Haoming, Department of Electrical and Information Engineering, Tongling University, Anhui Province, Tongling, 214000, China

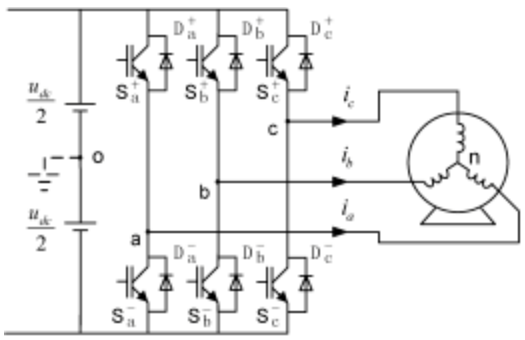

Fig. 2: PWM inverter principle

Stator voltage of three-phase Halbach motor can be expressed as:

$$U_S = \frac{2}{3}(U_a + U_b e^{j\frac{2}{3}\pi}) = \frac{2}{3} U_{dc} e^{j\omega t} \quad (1)$$

In equation1, U_{de} is voltage of DC bus.

As shown in Fig. 2, every switch in the inverter has two states: 1 represents closed, 0 represents opened, states of the 6 switches in the inverter has 8 kinds of combination.

Control switch's sequence and closing time, voltage to generate circular trajectory can be obtained.

Using Sa, Sb and Sc to represent the 3 switches state and the output voltage can be expressed as:

$$\begin{bmatrix} U_a \\ U_b \\ U_c \end{bmatrix} = \frac{1}{3} U_d \begin{bmatrix} 2 & -1 & -1 \\ -1 & 2 & -1 \\ -1 & -1 & 2 \end{bmatrix} \begin{bmatrix} S_a \\ S_b \\ S_c \end{bmatrix} \quad (2)$$

Through Clark transformation, voltage in three-dimensional coordinate system (a, b, c) can be converted to two-dimensional coordinate system (α,β):

$$\begin{bmatrix} U\alpha \\ U\beta \end{bmatrix} = \sqrt{\frac{2}{3}} \begin{bmatrix} 1 & 1-\frac{1}{2} & -\frac{1}{2} \\ 0 & \frac{\sqrt{3}}{2} & -\frac{\sqrt{3}}{2} \end{bmatrix} \begin{bmatrix} U_\alpha \\ U_\beta \\ U_c \end{bmatrix} \quad (3)$$

Figure 3 shows the basic space voltage under two static coordinate vectors and distribution map of voltage sector.

In order to make full use of the space vector, the reference output voltage Uref can be approximated as:

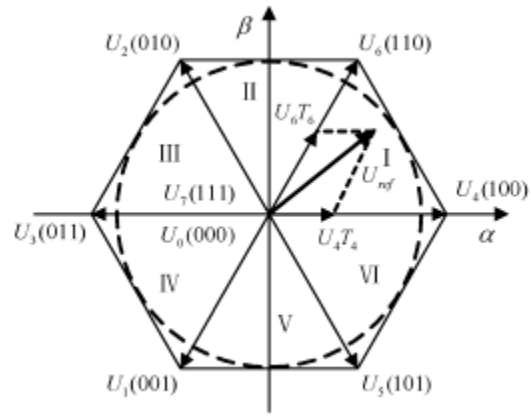

Fig. 3: Space voltage and its sector

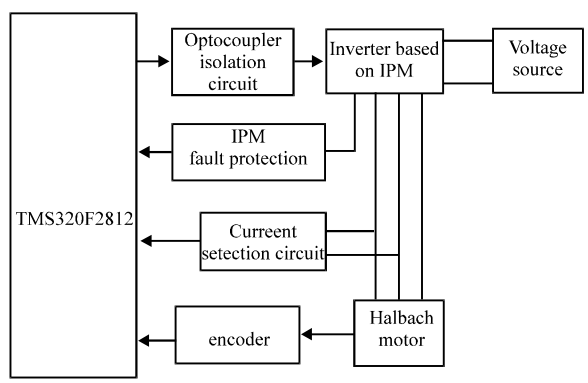

Fig. 4: Principle of AGV servo system

$$U_{ref} = \frac{1}{T_s}(T_x U_x + T_y U_y + T_0 U_0 + T_7 U_7) \quad (4)$$

In equation 4: Ux and Uy is basic voltage vector for two adjacent sectors; Tx, Ty represents occupancy time of two vectors, T0 and T7 represents occupancy time of zero vector; Ts is PWM sampling period.

Tx, Ty is shown in equation 5:

$$\begin{bmatrix} T_x \\ T_y \end{bmatrix} = \frac{\sqrt{3U_{ref}T_s}}{U_d} \begin{bmatrix} \sin\frac{n\pi}{3} & -\cos\frac{n\pi}{3} \\ -\sin\frac{(n-1)\pi}{3} & \cos\frac{(n-1)\pi}{3} \end{bmatrix} \begin{bmatrix} \cos(\omega t) \\ \sin(\omega t) \end{bmatrix}^{-1} \quad (5)$$

in formula 5: n represents sector of the reference voltage, n = 1, 2, ... 6.

AGV SERVO SYSTEM PRINCIPLE

Principle of AGV servo system based on Halbach motor as shown in Fig. 4, the system includes power circuits, drive circuits, control circuits, etc.

Drive circuits includes inverter main circuit, hall current sensor sampling circuit, over-current and over-voltage protection circuit, etc. The control circuit comprises TMS320LF2812 minimum hardware system, A/D sampling circuit, a power conversion circuit, photoelectric encoder signal processing circuit, SVPWM output driver circuit,etc.

SVPWM SOFTWARE REALIZATION

At present, high speed, high performance DSP has gradually become one of the main control chip is widely used in control system. TMS320F2812 is an efficient 32 bit fixed-point DSP chip based on C and C++ language, the floating point math library provided can achieve floating-point operations, SVPWM algorithm involves in this system will have a higher accuracy. TMS320DSP2812 has additional advantages to the common DSP it also uses high performance static CMOS technology, voltage is reduced from 5V to 3.3V which can reduce power consumption. And improve the instruction execution speed to 40MIPS, making it possible to improve the performance of the system by using the advanced control algorithm. Compared with designed digital motor control system based on TMS320LF2407A, the processing speed of TMS320f2812 is 5 times of LF2407, the AD conversion module is 12 bit, compared with the 10 bit TMS320LF2407 AD, conversion accuracy can be higher. In the control system, using TMS320f2812 as the motion control processor has its main advantage: High precision, high reliability, high integration and high flexibility, just to meet the intelligent management system for AGV.

The structure of the main program based on TMS320f2812 is very simple it is only to establish framework of the whole program, to finish DSP initialization, to realize DSP running environment etc. The main program is shown in Fig. 5. The main function of the program is to realize continuous cycle sampling and wait for interrupt.

While main program opens the AD interrupt, interrupt subroutine will run, calculation of direct torque control is realized in the subroutine. Interruption flow chart is shown as Fig. 6.

EXPERIMENT

Figure 7 shows the prototype of the AGV and testing platform.

Figure 8 shows Halbach motor prototype three-phase current waveform in low (150 rpm) speed. As can be seen from the graph, even in low speed phase, three-phase current amplitude and phase difference is constant, indicates that the prototype performance is good.

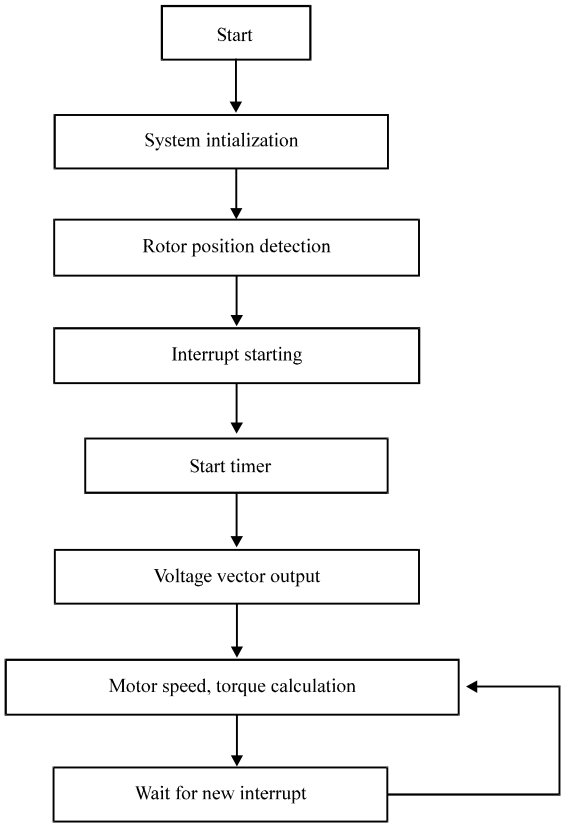

Fig. 5: Flow chart of main program

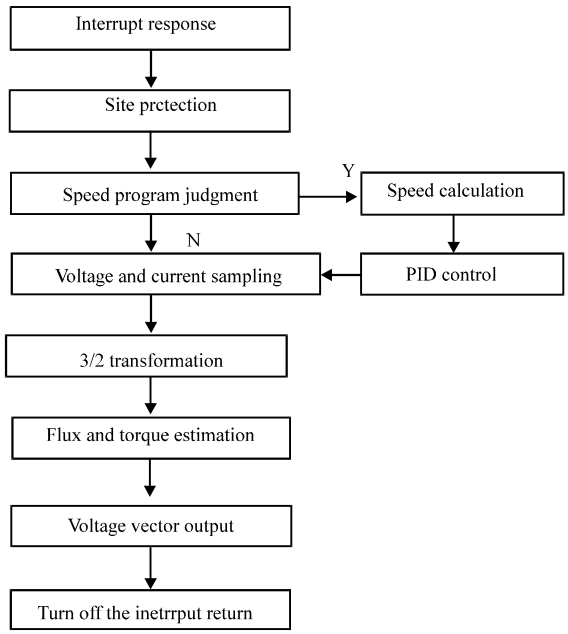

Fig. 6: Flow chart of Interruption

The voltage and current waveforms of switch IGBT as shown in Fig. 9. Can be seen: while the switch is opening,

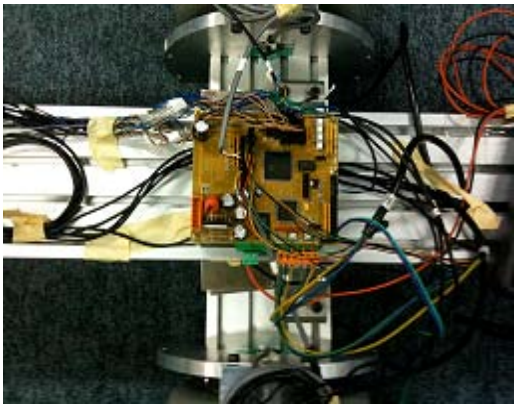

Fig.7: AGV and its testing platform

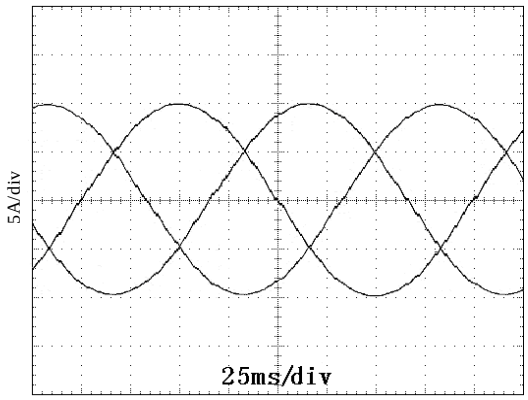

Fig. 8: Three-phase current

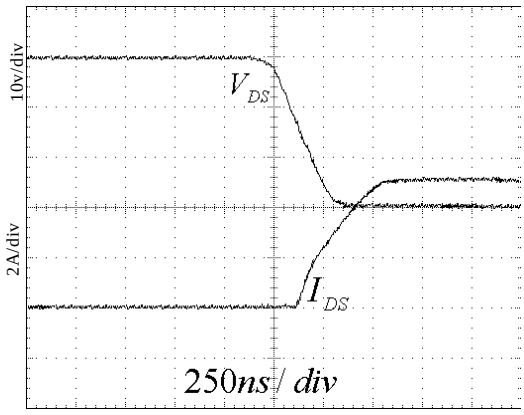

Fig. 9: Voltage and current waveforms of Switch IGBT

current flows from the drain to source is zero, so the switch is zero current turn-on. Compared to the hard switch circuit which can reduce the overlapping area of

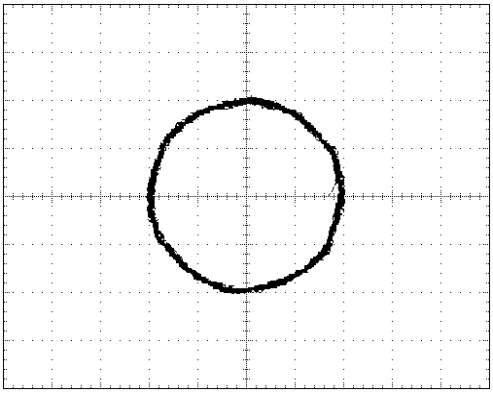

Fig. 10: Stator flux trajectory

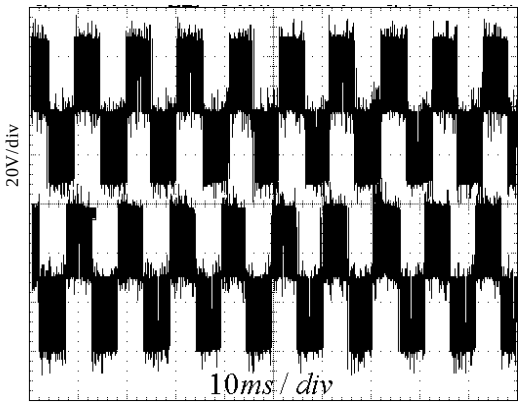

Fig. 11: Voltage waveform

voltage and current when it is opening, significantly reduce the power losses of switch which is conducive to improve the working efficiency of the converter.

In SVPWM experiment, stator flux trajectory as shown in Fig. 10, can be seen flux trajectory approximate to a circle, in agreement with practice.

In SVPWM test, voltage waveforms of motor in high speed as shown in Fig. 11. As can be seen waveform amplitude, phase difference is constant, the results show that both the motor, or the power management system can satisfy the testing AGV system requirements.

The torque in low speed (50 rpm) of traditional permanent magnet synchronous and Halbach motor as shown in Fig. 12, as can be seen from the graph, Halbach prototype has a low torque ripple which can improve dynamic performance of the motor, reduce AGV's vibration in walking.

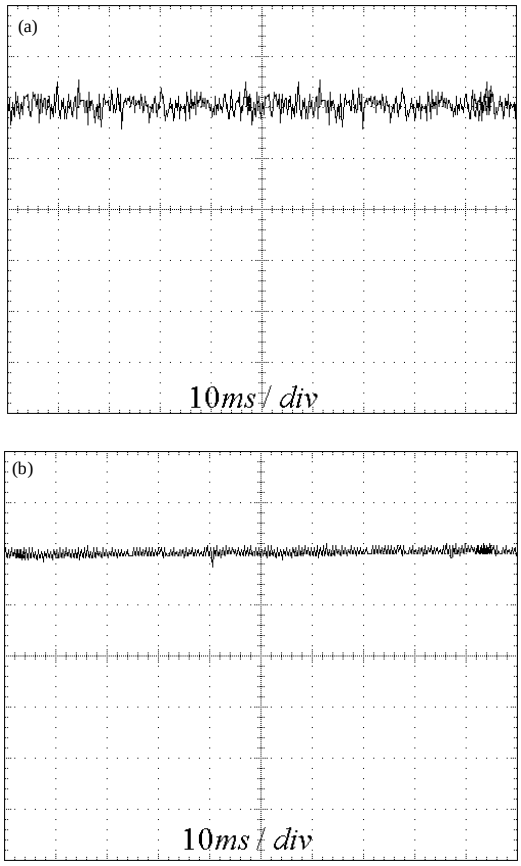

Fig. 12(a-b): Torque testing, (a) torque of traditional permanent magnet synchronous motor and (b) torque of Halbach motor

CONCLUSION

To meet the special requirements of the AGV system for motor, Halbach permanent magnet synchronous motor is used in this system.

SVPWM of Halbach motor is realized based on DSP TMS320F2812, experimental results show that SVPWM algorithm can effectively control Halbach motor and improve the dynamic performance of the AGV servo control system greatly.

ACKNOWLEDGMENT

It is a project supported by basic research programs of Suzhou science and Technology Department- industrial application part (SYG201327).

REFERENCES

Du, Y., X. Gao, Z. Liu and M. Sun, 2008. The new navigation system for automatic guided vehicle. Proceedings of the Chinese Control and Decision Conference, July 2-4, 2008, Yantai, Shandong, pp: 4653-4658.

Halbach, K., 1980. Design of permanent multipole magnets with oriented rare earth cobalt material. Nuclear Instruments Methods, 169: 1-10.

Halbach, K., 1981. Physical and optical properties of rare earth cobalt magnets. Nuclear Instruments Methods,187: 109-117.

Halbach, K., 1982. Perturbation effects in segmented rare earth cobalt multipole magnets. Nuclear Instruments Methods, 198: 213-215.