Journal of Applied Sciences

ISSN 1812-5654

science alert

ANSInet
an open access publisher
http://ansinet.com

Journal of Applied Sciences 13 (22): 5327-5334, 2013
ISSN 1812-5654 / DOI: 10.3923/jas.2013.5327.5334

Study of Braking Energy Recovery for Electric Bus Based on the AMESim

[1]Xiao-Bin Ning, [1]Yang-Yan Guo and [2]Jun-Ping Jiang
[1]Institute of Vehicle Engineering, Zhejiang University of Technology, China
[2]Hangzhou Aichi Engineering Vehicles Co., Ltd., China

Abstract: In order to improve efficiency of Electro-Hydraulic regenerative braking system on electric bus, this study will analysis dynamic performance and typical driving condition of electric bus based on ADAMS to establish electric bus simulation mode. The problem that EV does not have long endurance will be addressed in this study. The core innovation of this study is the design of Electro-Hydraulic regenerative braking system. In order to testify feasibility of this system, we will built hydraulic regenerative braking system simulation model based on AMESim and do simulation under ECE-15 cycle conditions. The result of foremost simulations aren't good enough, due to the volume of pump is constant, so we replace variable pump for constant pump and do simulation again. The results of simulation under ECE-15 cycle conditions show that the regenerative braking energy system can enhance endurance of EV and improve the efficiency of regenerative braking energy, meanwhile there is no influence to safety of vehicle.

Key words: Electric bus, regenerative braking, simulation

INTRODUCTION

There are some advantages of electric vehicle such as no emissions and no pollution, few noise, low running costs, especially in energy saving and environmental protection (Tan and Liu, 2007). However, there are some technical problems in electric car waiting to be solved (Mei and Zhang, 2004). In order to solve those problems such as electric vehicle can't drive in long distance after one time's charging, regenerative braking energy recovery system is one of the best solution. Related to study abroad, electric vehicles on a single charge driving range can increase at least 10-30% with regenerative braking (braking energy recovery) system (Zhao, 2008). Due to the low power density of electric energy storage means, however, electric regenerative braking system is not suitable to recovery energy (Sorniotti and Curto, 2008). Hydraulic regenerative braking system consist of pump/motor and accumulator embraces more advantage than electric regenerative braking system which consist of motor/generator and battery: Hydraulic energy storage can recover and release energy far more quickly than electric energy storage and recover more energy, thus prolong driving distance (Kim and Kim, 2006).

The main target of this study is to evaluate an electric bus design of hydraulic brake energy recovery system and establish an electro-hydraulic hybrid brake energy recovery system model with AMESim, after that we will carry on an analysis of the feasibility of regenerative braking system.

DYNAMIC MODEL OF ELECTRIC BUS

Suspension model: The front suspension is double wishbone independent suspension consist of elastic air suspension, double acting hydraulic dashpot-type shock absorber, Transverse stabilizing device and guide vane end stop. Main parameters of modeling are: coordinates of key points, location parameters of front wheels, stiffness characteristics of air spring, damping characteristics of shock absorber, mass parameter of front suspension and stiffness parameter of bushing.

Hard points of front suspension are those location points in key joints which could derived from detail drawing. Considering outer mold of components has a close bearing on checking motion and intuition of model, the component geometry of model based on those hard points should be confirm to its real structure as closely as possible. Input mass, size and material of components, location parameters of front wheels, curves stiffness characteristics of air spring and damping characteristics of shock absorber. Connect different components through restrain according to the restrain type defined by motions between different components.

Model assembly on ADAMS: Connecting different subsystem model according to restrain, then Model assembly is completed. Simulation model are shown in Fig. 1, important simulation parameters are shown in Table 1.

Corresponding Author: Xiao-Bin Ning, Institute of Vehicle Engineering, Zhejiang University of Technology, China

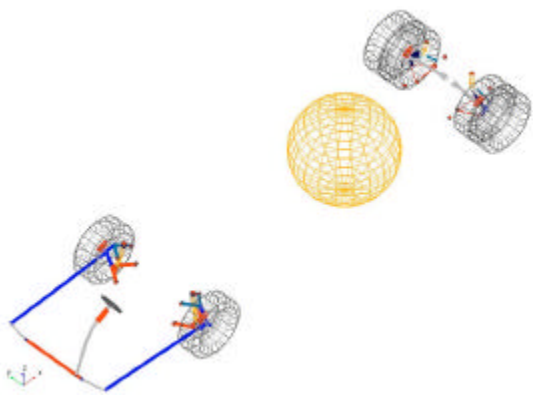

Fig. 1: Simulation model of electric bus

Table 1: Important simulation parameters

Overall parameters	Max total weight/kg	17067
	Radius of wheel/m	0.5175
	Reducer ratio of rear wheels	5.13
	Transmission ratio	6.22, 1.82
Battery	Rated capacity/Ah	600
Rated voltage/V	388.8	
Motor	Maximum torque/(N.m)	1350
	Maximum power/kW	160
	Displacement/cm3	
Pump/motor	Maximum rotation speed/(r min^{-1})	2440
Accumulator	Charge pressure/bar	150
	Volume/L	80

MODELING OF HYDRAULIC REGENERATIVE BRAKING SYSTEM

The electric bus (Fig. 1), consist of two drive sourcesandthe driving mode is rear axle drive. During modeling, the overall model is divided into two parts: The vehicle electrical driving system and hydraulic brake energy regeneration system.

Modeling of the electric bus, the model is simplified: Ignoring the role of the suspension system in the braking process, i.e., there is no vertical movement among the vehicleandexcluding the load displacement from front and rear axles of the wheel suspension vibration generated; Do not consider the situations that pitch and flip of the vehicle and the transmission of frictional losses.

Establish the bus driving force transmission system submodel: The pure electric bus powertrain model is shown in Fig. 3.

To study the electro-hydraulic hybrid drive capability of the bus and the driving range, to meet the demand for electric vehicles powertrain model simulation analysis as a comparison. Transmission and rear axle main reducer is more complex mathematical model in reality, in this study: We only consider the speed ratio. Thus it can be replaced by using a simple model gear ratio. When braking of the vehicle occurs, a drive shaft of driveline shown in Fig. 1 driven by the motor rotationandthen charge the battery according to calculation module in AMESim, the pure electric vehicle driveline model establish in this study is a simple electric regenerative brake systems.

Establish the electro-hydraulic hybrid regenerative braking energy system model: To establish hydraulic regenerative braking system model requires the hydraulic components library, control the signal component library and mechanical components of the library. The key part is to choose hydraulic components. There is no hydraulic pump/motor element model in AMESim hydraulic library so we build other components model to fulfill the hydraulic pump/motor function (Su and Yu, 2006). This article is not forced relief of simulation analysis, so instead of mandatory relief part of the hydraulic components can be used a direct-acting relief valve. The gear ratio module in mechanical library of AMESim can be created by a pair of meshing gear power coupler. Consolidated more sub-module design method, the final establishment of hydraulic regenerative braking system simulation model is shown in Fig. 4.

Fill the technical parameters in the parameter setting box according to the selected component models.

Establish electro-hydraulic hybrid system model: Parallel automotive powertrain and hydraulic regenerative braking system is connected by the power coupler, in AMESim submodel the two systems are connected by dynamic coupling which are combined in a single electro-hydraulic hybrid regenerative braking system (Nakazawa *et al*., 1987), as shown in Fig. 5. The key of simulation model operation is setting control signal. The electrical signals of the electro-hydraulic hybrid regenerative braking system consist of brake force distribution electrical signals and hydraulic system control signal. Other signals are constant.

Reasonable front and rear wheel braking torque distribution control is more complexandthe car is rear-wheel drive, so the system simulation control is rear brake mode. In separated rear wheel braking system, hydraulic regenerative braking system is to maximize the recovery of the braking energy. The rear electrical input of the system is zero, the front wheel is according to ECU braking requirements (output signal is braking intensity) so as to build a sub-module of the control signal. The front wheel control strategy is based on typical parallel braking energy recovery control strategies. The control method is shown in Fig. 6 (Xi *et al*., 2010; Lynn *et al*., 2005).

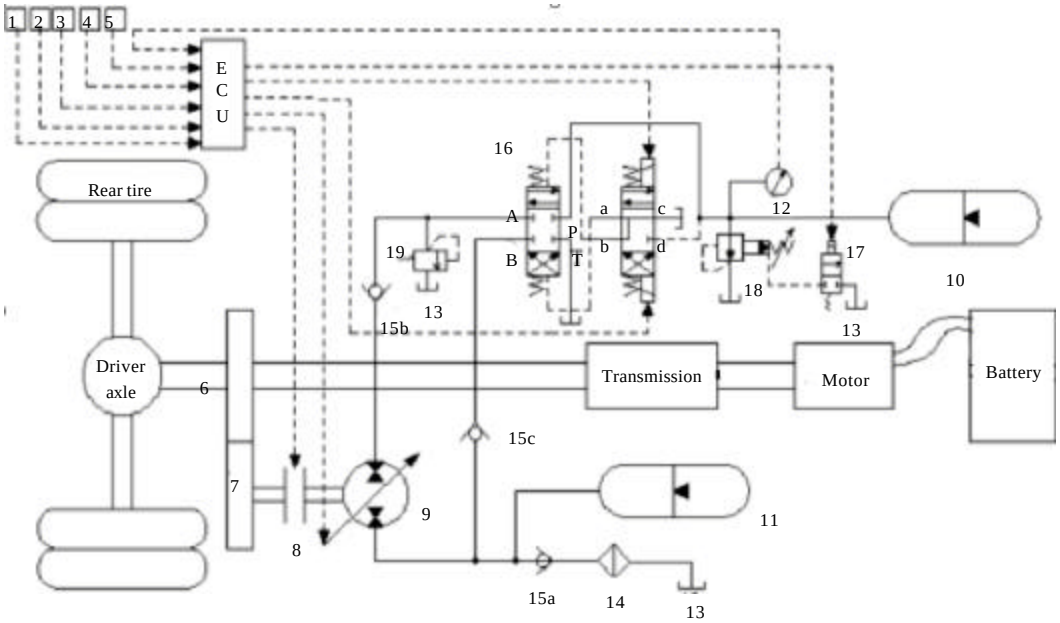

Fig. 2: Electric bus electro-hydraulic hybrid system structure. Clutch pedal signal 2: Brake pedal signal 3: Accelerator pedal signal 4: Mandatory relief signal 5: Speed signal 6: Main drive shaft 7: Power coupler 8: Clutch hydraulic 9: Pump/motor 10: High-pressure accumulator 11: Low-pressure accumulator 12: Pressure sensor 13: Fuel tank 14: Oil filter 15: One-way valve 16: Three four-way electro-hydraulic valve 17: Normally closed two-way valve 18: Pilot-operated relief valve 19: Directly operated

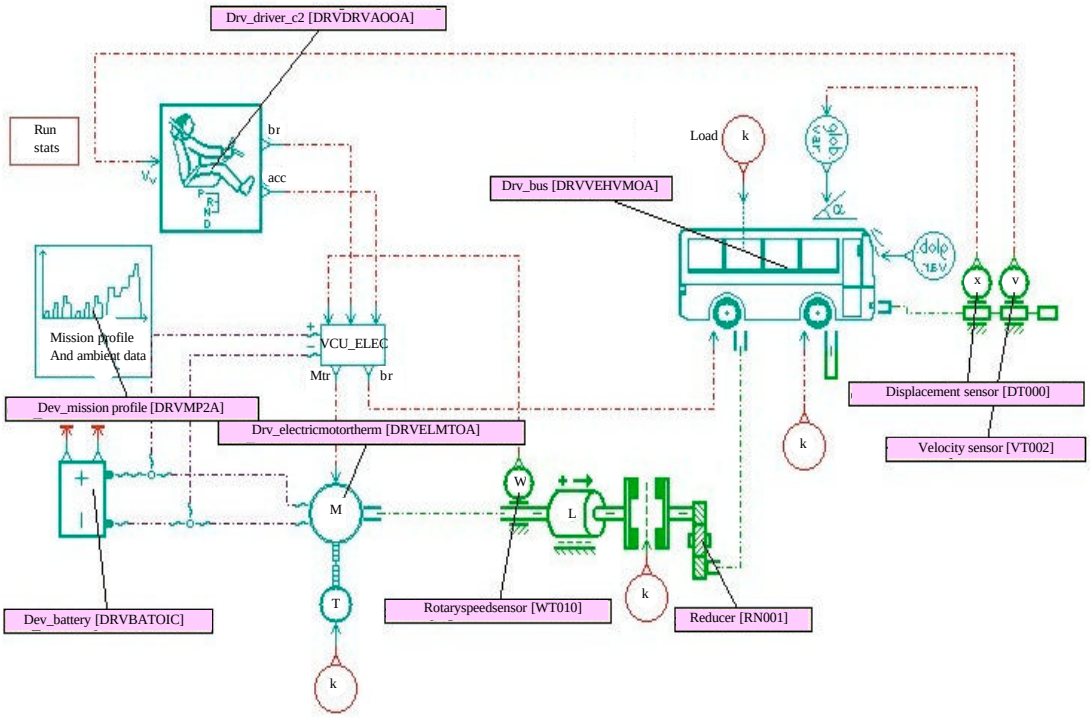

Fig. 3:Electric bus power transmission system model

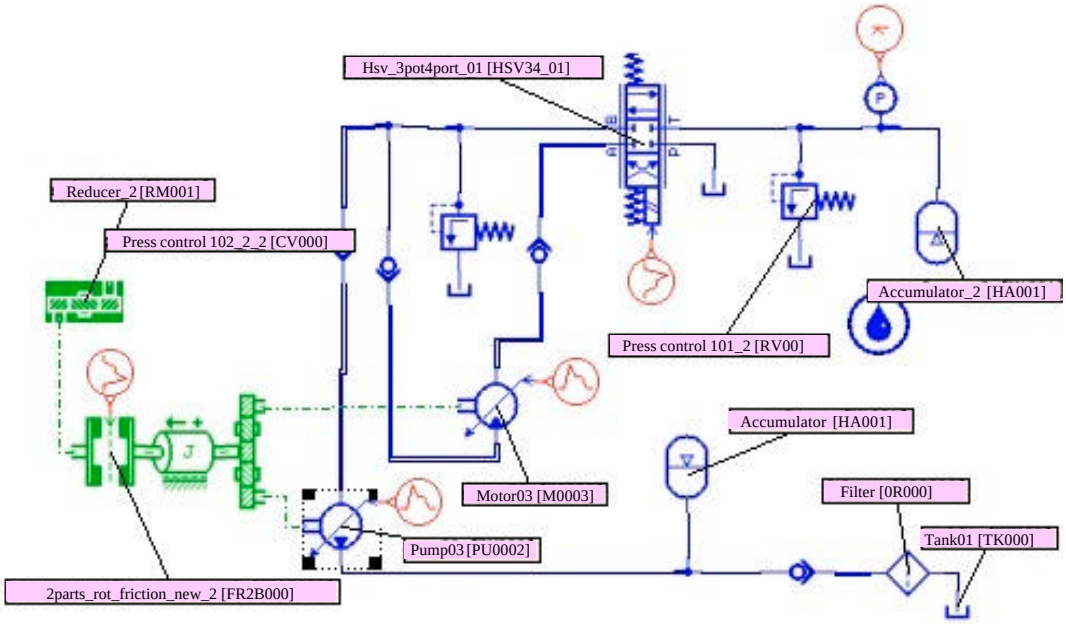

Fig. 4: Hydraulic regenerative braking system model

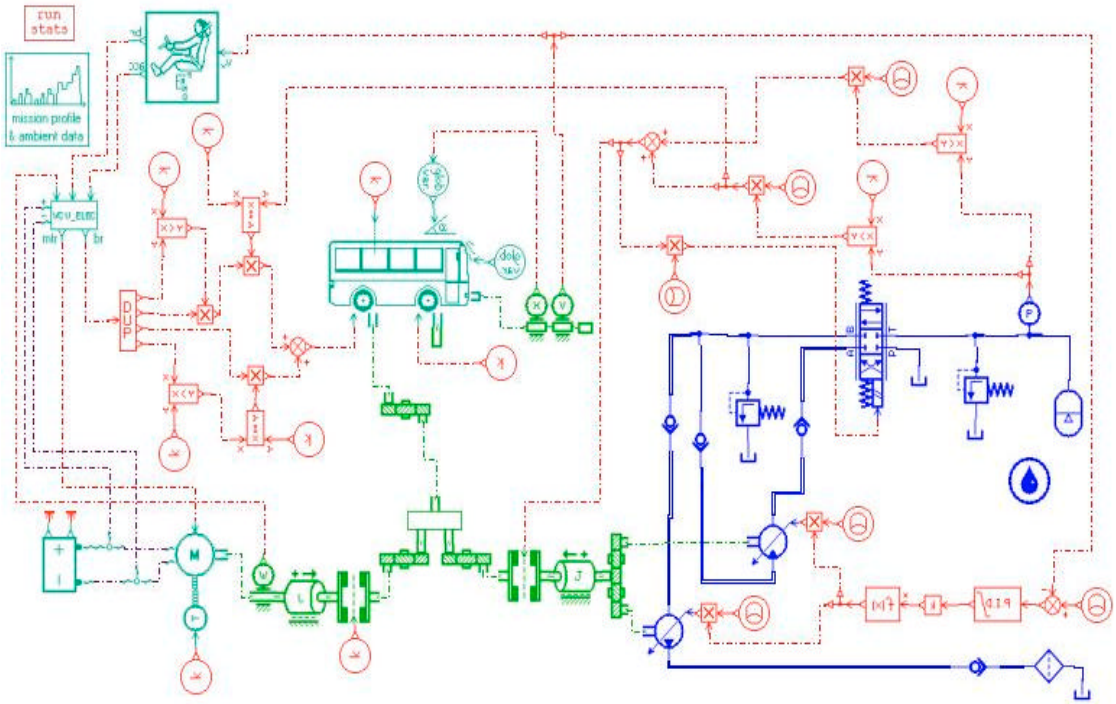

Fig. 5: Regenerative braking system with hydraulic of the power transmission system simulation model

When the vehicle is in condition of starting, accelerating and in the constant speed under a normal speed, the accumulator will release stored energyandthe pump/motor transformed it into mechanical energy to provide a driving force for the car. The energy release process control method of hydraulic regenerative braking system is shown in Fig. 7.

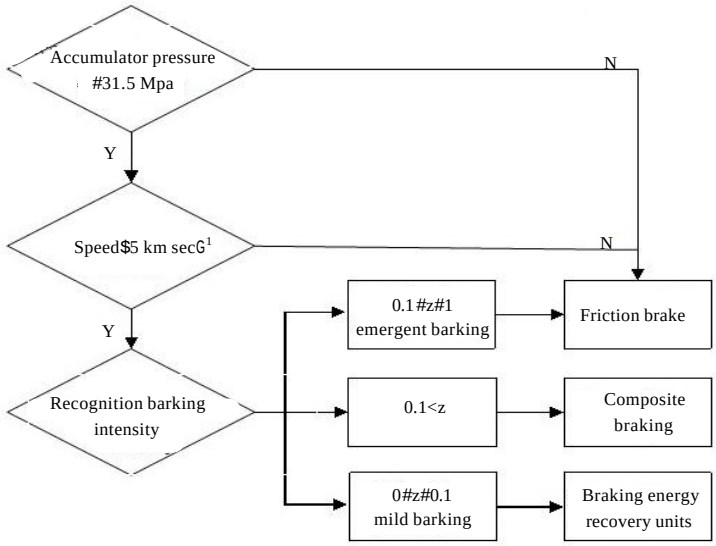

Fig. 6: Electric hydraulic hybrid regenerative braking system brake control method schematic diagram

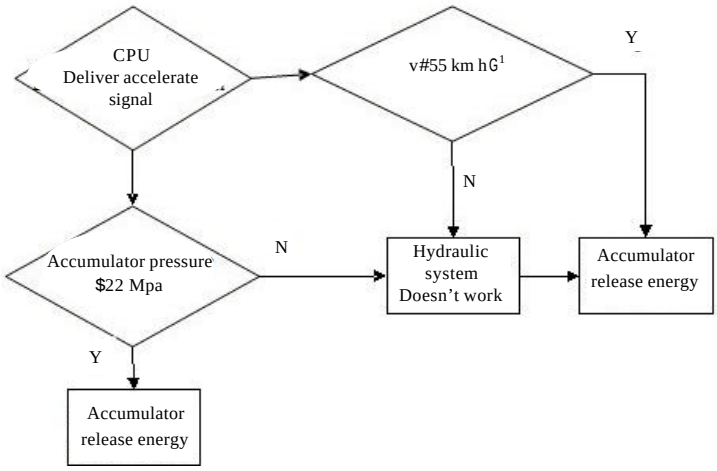

Fig. 7: Acceleration control method of electric hydraulic hybrid regenerative braking system schematic diagram

The pump is driven by the drive shaft while the vehicle is braking. In order to provide the driver good sense of braking, it is necessary to control the flow of oil in the hydraulic pump/motor so that it will provide appropriate drag torque; during vehicle' starting and the acceleration, the essential part of releasing stored energy is to make motor output torque or the rotational speed meet the change of the external load timely.

REGENERATIVE BRAKING SYSTEM ANALYSIS AND TYPICAL CONDITION ANALYSIS

Regenerative braking system analysis: Figure 5 shows models of the braking energy recovery and release simulation. The analysis of the hydraulic regenerative braking system's energy recovery capability and drive capability provide basis for the design of the regenerative braking system of electric bus.

Full load of running condition of vehicle: the bus is driven to 50 km h^{-1} by motor and hydraulic regenerative braking system jointlyandthen continue to travel 5 sec after parking brake, the brake strength is 0.1, braking and acceleration control strategy are according to Fig. 6 and 7. The simulation results are shown below: Significance: Fig. 8 and 9 show that the bus with electro-hydraulic hybrid regenerative braking system enables to make acceleration time shorter during low speedandthe bus reaches the predetermined speed faster

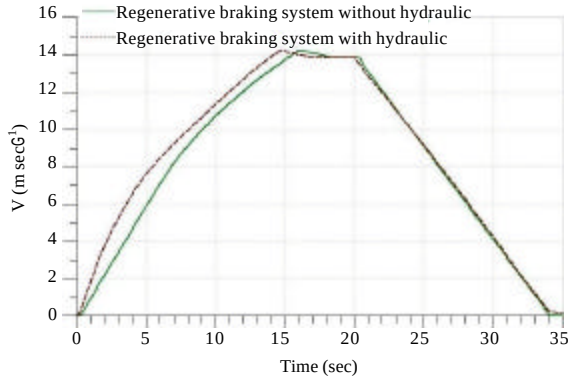

Fig. 8: Bus speed contrast curve

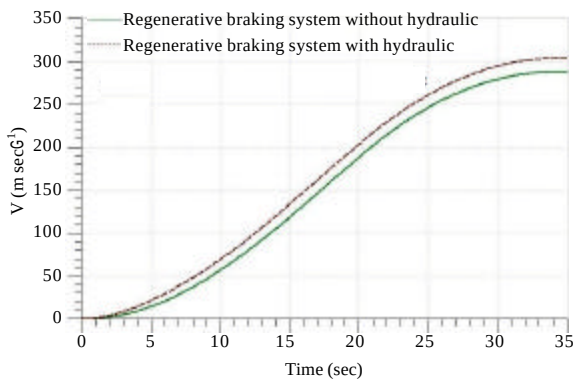

Fig. 9: Bus displacement contrast curve

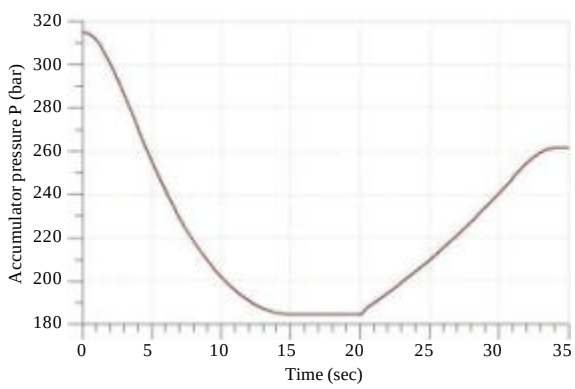

Fig. 10:Accumulator pressure change curve

in the frequent starting process. Fig. 10 and 11 curves show the design of the accumulator in this study is completely meeting the actual demand, its stability is good and it has good practicability.

Following conclusions can be obtained from simulation results above:

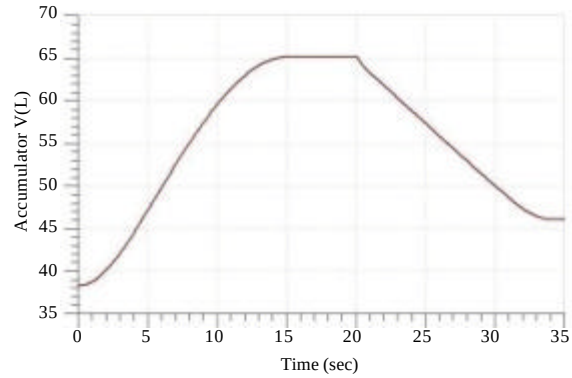

Fig. 11: High pressure accumulator gasbag volume change curve

- When motor and hydraulic regenerative braking system work together, the bus acceleration is faster than it without hydraulic systemanddriving displacement of bus has been prolonged by 20 m. During 0~14 sec, accumulator is releasing energy until the pressure drops to 180 bar. The hydraulic system works properly
- When the bus is braking, the displacement of secondary component is working under a given condition in order to maintain good manufacturing dynamic. The pressure of accumulator has not reached rated pressure because the storage of accumulator are designed for meeting the storage requirement when the vehicle are in 80 km h^{-1}

Typical condition analysis: The driving range of electric vehicles is to be tested according to GB/T 18386-2005 (2012). The test Conditions is as same as GB/T 18385-2005 and adopt condition method: Applying urban driving cycle simulation (ECE-15 condition) under GB, an urban driving cycle consists of four basic urban cycle working conditions.

Parameter settings of Urban driving cycle simulation analysis are: Hydraulic accumulator stop working pressure is 213 bar (when making urban driving cycle simulation in stop working pressure, battery discharge rate is lowest), the quality of automotive load is 2610 kg, Winds 3 m sec^{-1}, the road gradient 0, accumulator initial charging amount to 100%, see previous control strategy. The simulation results are as shown below.

Figure 12 shows that electric hydraulic hybrid bus's speed curve has basically closed to speed of the conditions ECE-15 which indicates that braking performance regenerative braking system is stable; Fig. 13 shows, the depth of discharge of electric hydraulic hybrid

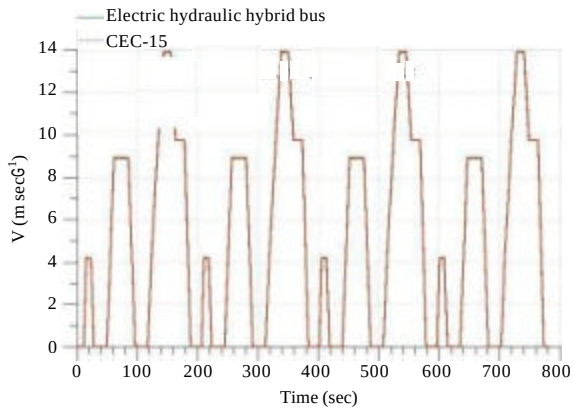

Fig. 12: System simulation speed and cycle condition speed contrast curve

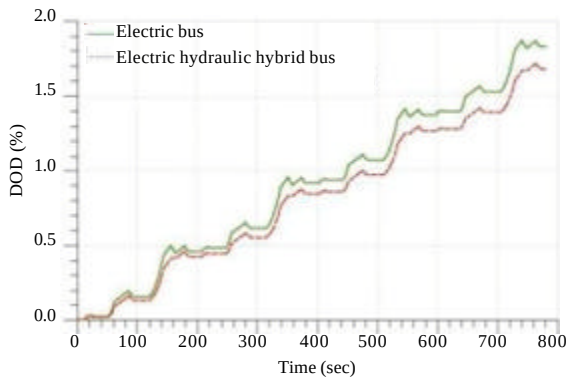

Fig. 13: Battery depth of discharge contrast curve

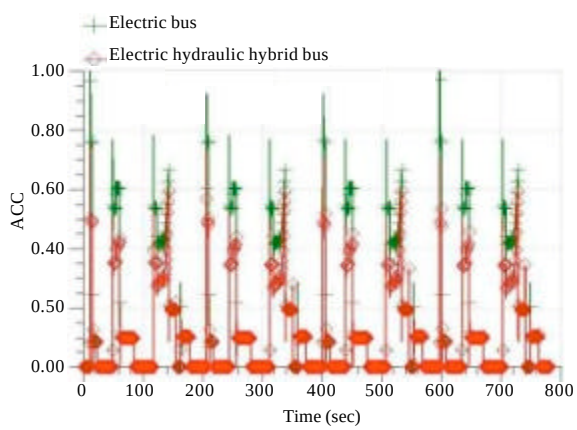

Fig. 14: Accelerated strength contrast curve

bus's battery is lower than electric bus, if we calculated as a percentage of the battery discharge (battery discharge depth of 60-70%), electric bus with hydraulic regenerative braking system on a single charge driving range 145 km, improve by 11 km (8.2%); Fig. 14 shows, for a not high average speed urban driving conditions, the torque provided by the secondary component has been basically meet the braking demand, mechanical friction of the electro-hydraulic hybrid bus work infrequently so that it will greatly increase its friction pad longevity.

CONCLUSION AND DISCUSSION

The results of simulation analysis and release of the electro-hydraulic hybrid regenerative braking system model show that the simulation model has a certain value of the electric bus braking energy recovery system research and development. The typical conditions show that single charge driving range of pure electric buses which equipped with the hydraulic braking system has increase by about 8.2% which indicating that the system has a certain energy recovery efficiency. However, considering the enormous energy consumption of kinetic-hydraulic-kinetic energy transition process in accumulator, a more energy-saving storage element should be applied in next step. After simulating influence of hydraulic components on regenerative braking system efficiency, optimization of hydraulic components parameters is done which laying foundation of experimental study and dynamic modulating road test of hydraulic regenerative braking system.

ACKNOWLEDGMENTS

Project supported by the National Natural Science Foundation of China (Grant No. 51375452 and 51145015) and Foundation of Zhejiang Province Laboratory of Automobile Safety.

REFERENCES

Lynn, A., E. Smid, M. Eshraghi, N. Caldwell and D. Woody, 2005. Modeling hydraulic regenerative hybrid vehicles using AMESim and Matlab/Simulink. Proceedings of the SPIE Enabling Technologies for Simulation Science IX, Volume 5805, May 25, 2005, Orlando, FL., USA., pp: 24-40.

GB/T 18386-2005, 2012. Electric vehicles energy consumption rate and continued driving mileage_ test method. Standardization Administration of China.

Kim, D. and H. Kim, 2006. Vehicle stability control with regenerative braking and electronic brake force distribution for a four-wheel drive hybrid electric vehicle. Proc. Inst. Mech. Eng. Part D J. Automobile Eng., 220: 683-693.

Mei, X.A. and N.P. Zhang, 2004. World electric vehicle technology development and trends. Automotive Res. Dev., 2: 19-23.

Nakazawa, N., Y. Kono, E. Takao and N. Takeda, 1987. Development of a braking energy regeneration system for city buses. SAE Technical Paper 872265. http://papers.sae.org/872265/.

Sorniotti, A. and M. Curto, 2008. Racing Simulation of a Formula 1 Vehicle with Kinetic Energy Recovery System. SAE International, Warrendale, PA., USA., Pages: 294.

Su, D. and J.H. Yu, 2006. AMESim hydraulic simulation of new technology and its application. Applied Comput. Technol., 33: 35-37.

Tan, Y.M. and L. Liu, 2007. Electric vehicle regenerative braking system structure and control strategy. Beijing Car, 2: 15-18.

Xi, J.G., Z.P. Gao, J. Chen and J.F. Cao, 2010. Regenerative braking energy system based on amesim modeling mechanical. Des. Manuf., 9: 65-67.

Zhao, W.P., 2008. Pure electric bus regenerative braking and hydraulic braking coordinated control algorithm research. Jilin University, Changchun, China.