Journal of Applied Sciences

ISSN 1812-5654

science alert

ANSInet
an open access publisher
http://ansinet.com

Journal of Applied Sciences 13 (22): 5356-5362, 2013
ISSN 1812-5654 / DOI: 10.3923/jas.2013.5356.5362

Control Strategy for Starting and Acceleration of Pure Electric Vehicle

J.J Hu, Y. Ji and R. Du
State Key Laboratory of Mechanical Transmission, Chongqing University, Chongqing, 400044, People's Republic of China

Abstract: In order to solve the problems such as smoothness, slipping backward on a slope and acceleration performance which are crucial issues during the starting process of the Pure Electric Vehicle (PEV), the integrated output characteristics of the engine and torque converter was studied in the starting and acceleration process of vehicle equipped with automatic transmission and the characteristics of driving motor, power battery pack and power train system of PEV were comprehensively considered. Furthermore, a control strategy for starting and acceleration of pure electric vehicle was proposed. With the MATLAB/Simulink software platform, the starting and acceleration performance of pure electric vehicle using the proposed control strategy was analyzed. The results show that the starting performance of pure electric vehicle is very smoothness at different accelerator opening by using the proposed control strategy and the acceleration performance has been effectively improved.

Key words: Pure electric vehicle, starting and acceleration, automatic transmission, control strategy, simulation

INTRODUCTION

As the energy crisis and environmental pollution increasing seriously, the Pure Electric Vehicle (PEV) achieves widely concern owing to its low noise, non-pollution, multiple energy sources and high energy efficiency and it is regarded as an important development direction for automobile industry by countries all over the world (Jeong and Lee, 2011). For improving ride comfort and safety of PEV as well as driving feeling of driver in the starting and acceleration process of PEV, an effective control strategy for starting and acceleration has very important theoretical value and practical significance.

Up to now, many researches have been undertaken on the starting control of vehicle. The starting control strategy of vehicles separately equipped with dual clutch transmission, automated mechanical transmission and continuously variable transmission was studied by researchers (Kulkarni *et al*., 2007; Chen and Kong, 2011; He *et al*., 2011). The starting requirements were satisfied by controlling the engagement process of the clutch in these researches. However, PEV cancelled the clutch at the power train system, so that these control methods can't be used in PEV. In terms of the starting and acceleration process of PEV, the methods such as constant torque control, constant power control and integrated control of constant torque and constant power for the motor were studied by She JG and Wan SY (She and Wan, 2003). In order to improve the starting and acceleration performance of PEV, the simulation model of dual closed-loop speed regulating system based on vehicle speed and current was established and the step response of vehicle speed is simulated by Wang *et al*. (2009a). However, the effect of slope on starting performance wasn't considered. Dou *et al*. (2010) proposed a control strategy which could make the PEV creeping slowly when the opening of both the brake pedal and accelerator pedal was zero, so that the PEV couldn't slip backward in the uphill in the starting process. However, a reference curve for the control strategy was given directly without any explanation, such as how to determine the curve and use for the control strategy, so it has a limitation for actual application. Wang (2009) put forward a linear pedal driving control strategy but the relationship between the acceleration pedal and the motor torque was treated too simply to obtain good acceleration performance of vehicle. The power performance of PEV was optimized by using fuzzy control method whose inputs were the accelerator opening and motor speed and output was the motor target torque but the driver's torque demand under actual running wasn't considered in the strategy by authors (Wang *et al*., 2009b).

Through studying the starting and acceleration performance of a vehicle equipped with automatic

Corresponding Author: J.J Hu, State Key Laboratory of Mechanical Transmission, Chongqing University, Chongqing, 400044, People's Republic of China

transmission (AT), the starting and acceleration control strategy of the PEV was proposed. To verify the effectiveness of proposed control strategy, a simulation model of PEV was established by using the MATLAB/Simulink software.

DYNAMIC ANALYSIS FOR STARTING AND ACCELERATION PROCESS OF PURE ELECTRIC VEHICLE

The PEV studied in this paper is equipped with a two-speed automated mechanical transmission without any clutch. The structure of the PEV is shown in Fig. 1.

In the starting and acceleration process of PEV, the force analysis of the PEV is shown in Fig. 2. These forces include the vehicle driving force F_t, the rolling resistance F_f, the air resistance F_w, the slope resistance F_i and the braking force F_b (Yu, 2010):

$$F_t = \frac{T_d}{r} = \frac{Ti\eta}{r} \tag{1}$$

$$F_f = G_f \cos\gamma \tag{2}$$

$$F_i = G\sin\gamma \tag{3}$$

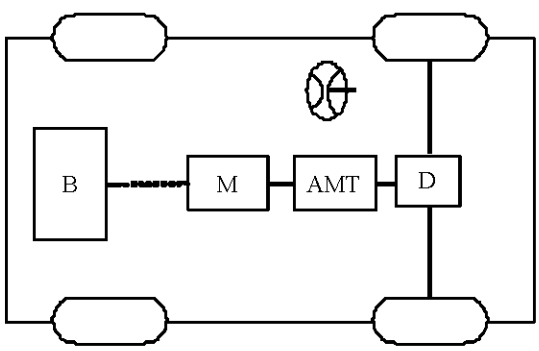

Fig. 1: Structure of pure electric vehicle

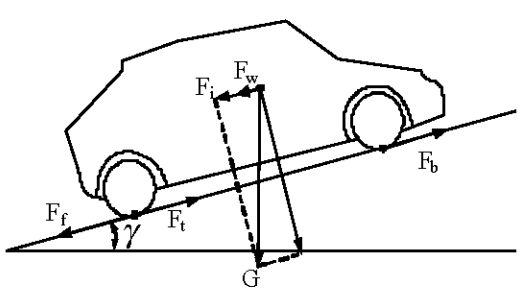

Fig. 2: Force analysis in the pure electric vehicle's starting and acceleration process

$$F_w = \frac{C_D A V^2}{21.15} \tag{4}$$

$$F_b = \frac{\beta T_{umax}}{r} \tag{5}$$

$$\sum F = F_f + F_i + F_w \tag{6}$$

where, T_d is the vehicle driving torque; r is the rolling radius of driving wheel; T is the motor output torque; i is the speed ratio of transmission; η is the efficiency of mechanical transmission; G is the gravity of vehicle; f is the coefficient of rolling resistance; γ is the road slope; C_D is the coefficient of air resistance; A is the frontal area of vehicle; V is the vehicle speed; T_{umax} is the maximum braking torque; β is the opening degree of brake pedal.

In the starting and acceleration process, the inertia force of the PEV needs to be overcome. The vehicle mass includes moving mass and rotating mass which both produce moment of inertia. According to Newton's second law, the equation for starting and acceleration process of PEV can be obtained by:

$$F_t - \sum F = (\delta m_v + m_c)a \tag{7}$$

$$a = \frac{F_t - \sum F}{\delta m_v + m_c} \tag{8}$$

where, δ is the conversion coefficient of vehicle rotating mass; m_v is the curb mass of vehicle; m_c is the loading mass of vehicle; a is the vehicle acceleration.

CONTROL STRATEGY FOR STARTING AND ACCELERATION OF PURE ELECTRIC VEHICLE

The starting and acceleration performance of vehicle not only must be smooth and rapid but also should meet driver's starting intention such as slowly starting, normally starting, rapidly starting which can response for the different accelerator opening correspondingly. Meanwhile, the vehicle should have good acceleration performance to get good driving feeling. The vehicle equipped with AT has many advantages such as smooth starting, automatic starting and standing on a certain slope with zero accelerator opening and good acceleration performance in the acceleration process (Katsumi *et al*., 1995). Therefore, a control strategy for automatic starting and acceleration of the PEV was proposed based on the performance analysis of a vehicle equipped with AT.

Automatically starting control strategy: The control strategy for starting automatically aims at achieving a safe and smooth starting process. The function of the control strategy is that the pure vehicle doesn't slip backward in the uphill or jump forward on the flat road and downhill when the accelerator pedal is totally released at the beginning of starting process. Therefore, the essence of the control strategy is to coordinate the drive force with the brake force.

When the vehicle starts in the uphill, the vehicle has a tendency to slip backward owing to gravity. For most vehicles equipped with AT, the torque converter can always provide output driving torque when the accelerator pedal is totally released, so that the vehicles won't slip backward. Likewise, the motor can be controlled to provide a fixed value output driving torque to avoid slipping backward for the PEV. However, the motor has a heavy current output when the motor speed is equal to zero, which can make the motor generate lots of heat when the driver presses on the brake pedal for a long time during parking brake. Thus in order to solve the problem, a control method is proposed. When the opening degree of brake pedal is decreased to β_0, the motor driving torque is increased to T_{start} (T_{start} is called motor starting torque) with a change rate which meets the requirement of vehicle comfort by controlling the motor. When the speed is equal to zero, the relationship between β_0 and T_{start} can be expressed as:

$$\beta_0 = \frac{T_{start} i_m \eta}{T_{umax}} \quad (9)$$

where, im is the maximum gear ratio of the PEV. If the vehicle lies on flat road or downhill and the motor is still controlled to provide a constant torque, the driving force will be far greater than the running resistance, so that the vehicle will accelerate suddenly and continuously, thus leading to the phenomenon of jumping forward. Therefore, the motor starting torque needs to be adjusted continuously according to the variation of the vehicle speed.

When the accelerator opening is zero, the motor starting torque should be continuously decreased with vehicle speed increasing to avoid jumping forward. In order to ensure that the PEV can achieve standing on a certain slope, the output torque of motor can be obtained by the Eq. 7 when the vehicle speed is equal to zero. Referring to the idle creeping function of the vehicle equipped with an AT, the PEV can also run steady at the speed of 5 km h^{-1} on the flat road and the motor output torque at this speed can be calculated by the Eq. 7. In order to avoid the danger that the vehicle acceleration and speed is too high in the downhill, the output torque of motor should be decreased when the vehicle speed is greater than 5 km h^{-1} and be decreased to zero when the speed is more than 8 km h^{-1}.

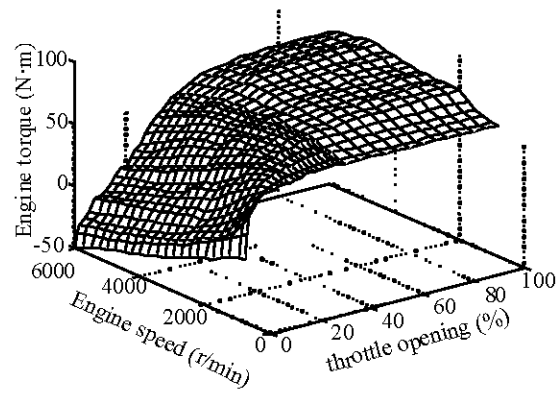

Fig. 3: Steady output torque characteristics of engine

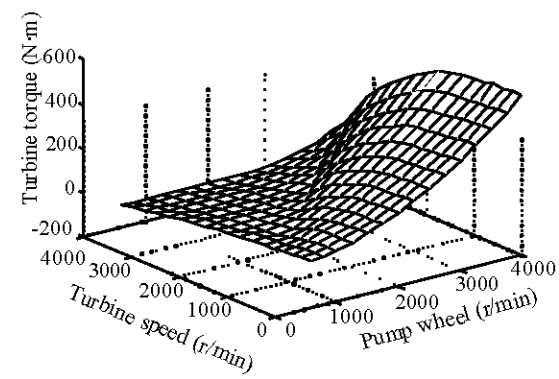

Fig. 4: Output characteristics of torque converter

By studying the output torque characteristic of the vehicle equipped with AT, the change law of motor starting torque when the vehicle speed range of the PEV is at 0-5 km h^{-1} can be confirmed by using the calibration method. Therefore, the output torque characteristic of AT should be researched.

The characteristics of the engine output torque are shown in Fig. 3; the characteristics of the converter output torque obtained by test are shown in Fig. 4. The relationship between turbine torque of converter and vehicle speed can be determined based on the data of Fig. 3 and 4 when the engine is at idle speed (approximately at 800 r min^{-1}), which is shown in Fig. 5.

Generally, the vehicle starting adopts the lowest gear position especially starting on the hill. Because the curb mass and tire radius of the vehicle equipped with AT is

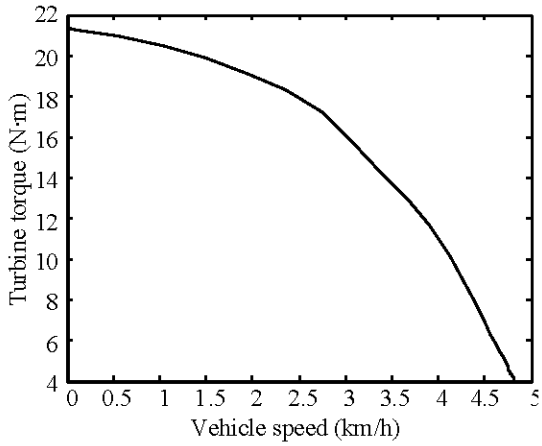

Fig. 5: Relationship between torque of turbine and vehicle speed

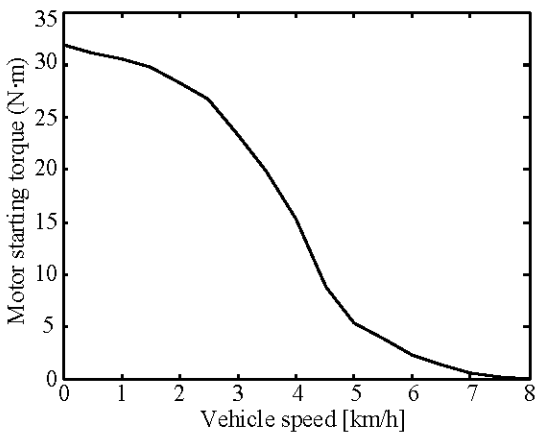

Fig. 6: Relationship between motor output torque and vehicle speed during starting

similar to the PEV, the motor starting torque of the PEV can be determined by the Eq. 10 when the accelerator opening is zero.

$$T_{start} = T_t \frac{i_e}{i_m} \tag{10}$$

where, T_t is torque of turbine When the throttle opening degree is zero; ie is the maximum ratio of the vehicle equipped with AT.

Based on the Fig. 5 and the Eq. 10, the relationship between motor output torque and vehicle speed in the starting process is determined by using the nonlinear fitting method, which is shown in the Fig. 6.

Control strategy for acceleration: Generally, three kinds of relationship between the accelerator opening and the motor driving torque are used, which are shown in Fig. 7.

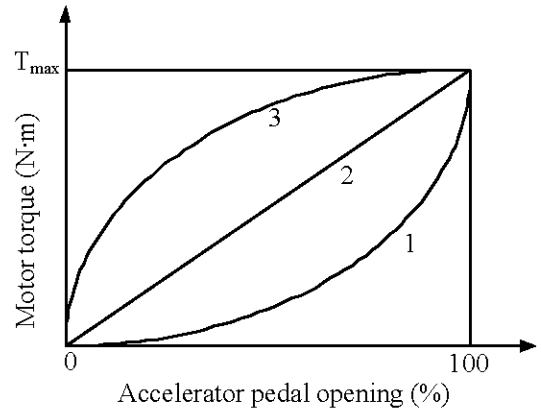

Fig. 7: Relationship between accelerator pedal opening and motor driving torque

The first one which is called soft pedal strategy can lead to very poor acceleration performance in the starting process of vehicle but good drivability under low load. The second one which is simply linear relationship can lead to better acceleration performance (Dou *et al*., 2010). The literature indicates that the relationship between the opening degree of the accelerator pedal and driving torque is generally shown as curve 3, which can provide very good acceleration feeling (Mckay *et al*., 2000). Therefore, the third calibration method was used to define the relationship between the opening degree of the accelerator pedal and the motor driving torque.

The basic principle of torque calibration (Zhu *et al*., 2005) is that when the motor speed is constant, the greater the opening degree of accelerator pedal is, the larger the motor output torque should be. When the position of accelerator pedal is fixed, the higher the motor speed is, the smaller the motor output torque should be.

In this study, the method of determining control strategy for acceleration is that the nonlinear characteristics of output torque of vehicle equipped with AT and the inherent characteristics of motor are considered to calibrate the motor output torque for PEV by using the third calibration method. Since the motor is controlled to provide starting torque for vehicle starting when the accelerator opening is zero in the control strategy for automatic starting, in order to avoid the phenomenon that the motor output torque is decreased while the opening degree of the accelerator pedal is increased, the motor output torque should be increased nonlinearly based on the motor starting torque as the opening degree of the accelerator pedal is increased. The relationship between motor output torque and motor

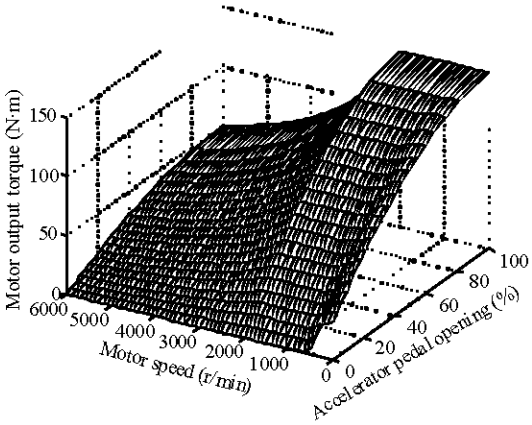

Fig. 8: Relationship between motor output torque and motor speed at different accelerator pedal opening

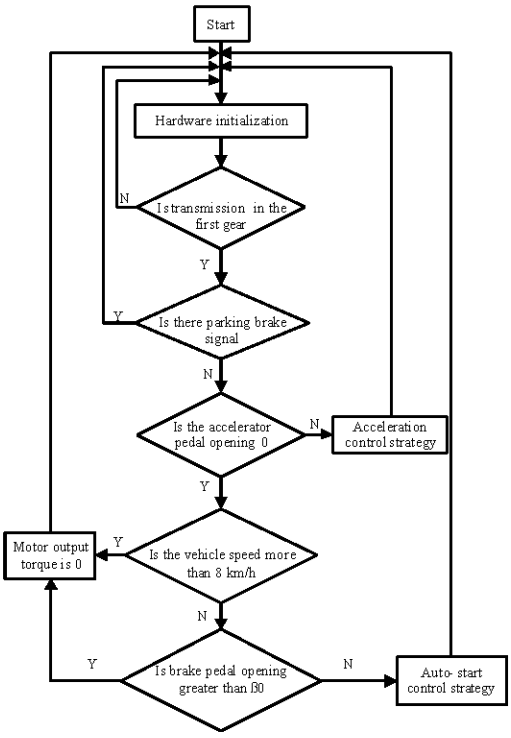

Fig. 9: Control flow of starting and acceleration for pure electric vehicle

speed at different accelerator pedal opening is shown in Fig. 8. The flow diagram of starting and acceleration control for the PEV is shown in Fig. 9.

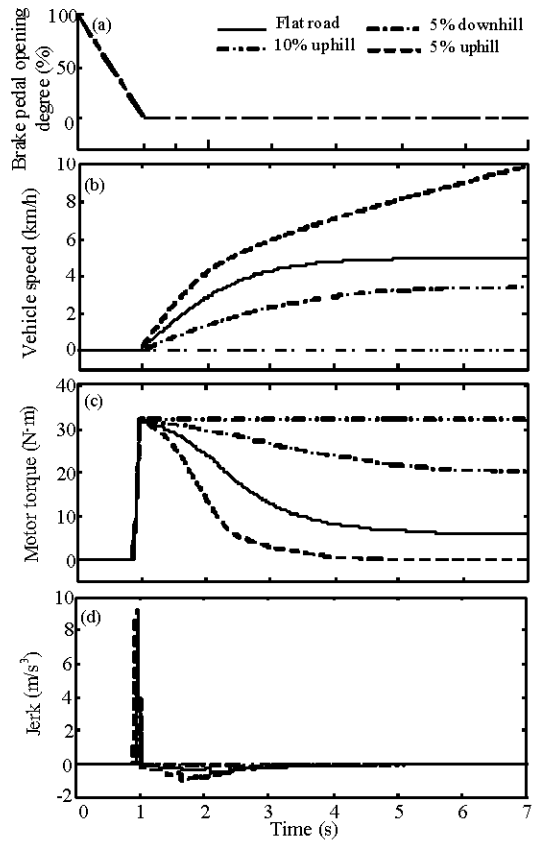

Fig. 10(a-d): Simulation result of automatic starting on different slope, (a) Brake pedal opening degree, (b) Vehicle speed, (c) Motor torque and (d) Jerk

SIMULATION ANALYSIS OF STARTING AND ACCELERATION PERFORMANCE

With the Matlab/Simulink software, the starting and acceleration performance of the PEV is simulated and analyzed on a good road when the accelerator opening is zero, 5, 20, 70% separately. The main parameters of vehicle and road conditions involved in the simulation are shown in Table 1.

The automatic starting performance simulation results of PEV based on different road slopes when the opening degree of accelerator pedal is zero is shown in Fig. 10. The curve of vehicle speed in the starting process is shown in Fig. 10b, which shows that the PEV using the proposed auto-start control strategy won't slip backward in the uphill if slope is less than 10% and the maximum stable vehicle speed of the PEV on the flat road in the starting process is about 5 km h^{-1}. The output torque of the motor

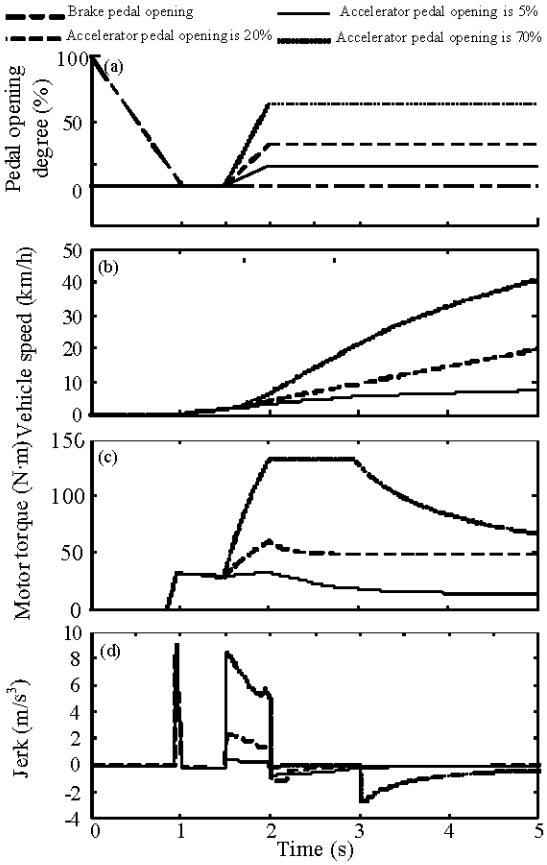

Fig. 11(a-d): Simulation result for acceleration by using the proposed control strategy, (a) Pedal opening degree, (b) Vehicle speed, (c) Motor torque and (d) Jerk

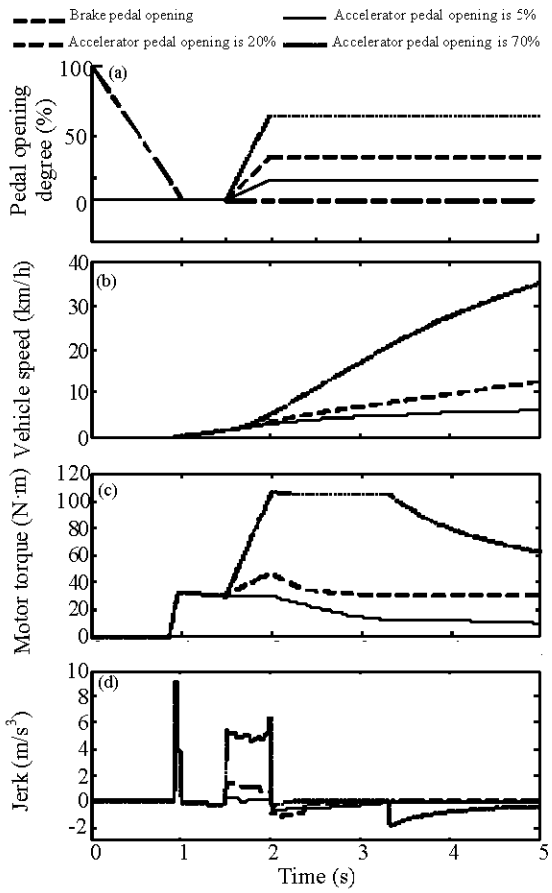

Fig. 12(a-d): Simulation result for acceleration by using the linear calibration method, (a) Pedal opening degree, (b) Vehicle speed, (c) Motor torque and (d) Jerk

Table 1: Vehicle main parameters and road conditions

Parameter (units)	Value
m_f (kg)	1100.000
r (m)	0.262
i_1	9.560
i_2	4.070
f	0.018
T_{max} (N m^{-1})	150.000
δ	1.050
η	0.900
T_{umax} (N m^{-1})	2040.000
γ	0.700

is automatically decreased with vehicle speed increasing Fig. 10c, so that the driving safety is ensured. When the vehicle starts in the downhill that slope is less than 5%, the motor output torque will be automatically decreased to zero when the vehicle speed of the PEV is more than 8 km h^{-1}. When the opening degree of accelerator pedal is zero, the jerk of the vehicle mainly occurs in the early stage of the starting process and is less than 10 m sec^{-3} in the whole starting process. Therefore, the smoothness of starting performance of the PEV has been realized.

The simulation results of PEV using the proposed control strategy for acceleration on the flat road are shown in Fig. 11.The simulation results of PEV using the control strategy for acceleration which is determined by using the linear calibration method are shown in Fig. 12. The simulation conditions are the same as before except for control strategies. The vehicle speed respectively reaches 7.4, 19.7 and 40.8 km h^{-1} in 5 sec when the opening degree of accelerator pedal is 5%, 20% and 70% separately, which is shown in the Fig. 11b. The jerk of the PEV is not more than 10 m sec^{-3} in the whole process of the starting and acceleration, so that the starting and acceleration performance of the PEV is very smooth. Figure 12b shows the variation of vehicle speed when the control strategy for acceleration is determined

by using the linear calibration method. The vehicle speed respectively reaches 6.1, 12.6 and 34.9 km h^{-1} in 5 sec when the opening degree of accelerator pedal is 5%, 20% and 70% separately. Obviously, the proposed control strategy for acceleration can significantly improve the power performance of the PEV to preferably satisfy the driver's acceleration intention.

CONCLUSION

Based on the study of starting and acceleration performance for the vehicle equipped with AT, a control strategy for starting and acceleration of PEV was proposed. As the accelerator opening is zero, the starting performance of PEV using the proposed control strategy was analyzed by simulation. The results show that the starting of PEV is very smooth and safe by using the proposed auto-start control strategy. It doesn't slip backward in the uphill which slope is less than 10% and doesn't jump forward suddenly on the flat road or downhill. The simulation results for starting and acceleration performance of PEV using the proposed acceleration control strategy show that the power performance of the vehicle is better than that using the control strategy based on linear calibration method and the vehicle jerk can be controlled in an reasonable value in the starting and acceleration process to make sure the riding comfort.

ACKNOWLEDGMENTS

The research is supported by Natural Science Foundation Project of CQ CSTC (CSTC, No. 2011BA3019).

REFERENCES

Chen, X.P. and G.L. Kong, 2011. A method of AMT starting control with constant engine speed. Proceedings of the International Conference on Consumer Electronics, Communications and Networks, April 16-18, 2011, XianNing, China, pp: 17-21.

Dou, G.W., F. Liu and H. Chen, 2010. Drive control strategy development and practice of pure electric vehicle. Shanghai Automotive, 5: 8-11, 31.

He, L., L. Li, L.Y. Yu and J. Song, 2011. Multi-state control strategy of starting for a wet friction clutch via a fuzzy logic algorithm. Int. J. Automotive Technol., 12: 537-544.

Jeong, Y.S. and J.Y. Lee, 2011. Parameter identification of an induction motor drive with magnetic saturation for electric vehicle. J. Power Electron., 11: 418-423.

Katsumi, K., I. Hiroshi, N. Shinya and Y. Kenichi, 1995. Torque converter clutch slip control system. SAE Technical Paper Series No. 950672.

Kulkarni, M., T. Shim and Y. Zhang, 2007. Shift dynamics and control of dual-clutch transmissions. Mech. Mach. Theory, 42: 168-182.

Mckay, D., G. Nichols and B. Schreurs, 2000. Delphi electronic throttle control systems for model year 2000: Driver features, system security and OEM benefits. ETC for the mass market. SAE Technical Paper 2000-01-0556. http://papers.sae.org/2000-01-0556/

She, J.G. and S.Y. Wan, 2003. A study on the control of starting and acceleration for EV motor. J. Hubei Automotive Ind. Inst., 17: 1-3, 8.

Wang, G.P., J. Ma and P.P. Yang, 2009. Dynamic modeling and simulation of starting and acceleration for electric vehicle. J. Changan Univ., 29: 98-102.

Wang, J., J.Z. Yang and Z.B. Cai, 2009. The optimum control strategy of battery electric car based on fuzzy control. Automotive Eng., 31: 362-365.

Wang, L.G., 2009. Pure electric bus?s powertrain control strategy. M.Sc. Thesis, Jilin University, Jilin, China.

Yu, Z.S., 2010. Automobile Theory. 5th Edn., China Machine Press, China.

Zhu, Y., H.H. Sun and Y.G. Tian, 2005. Study on control system of fuel cell bus. Automotive Eng., 27: 136-140.