Journal of Environmental Science and Technology

ISSN 1994-7887

science alert

ANSInet
an open access publisher
http://ansinet.com

OPEN ACCESS Journal of Environmental Science and Technology

ISSN 1994-7887
DOI: 10.3923/jest.2017.220.229

Research Article
Process Simulation of CO_2 Utilization from Acid Gas Removal Unit for Dimethyl Ether Production

Bayu Sari Adji and Sutrasno Kartohardjono

Process Intensification Laboratory, Department of Chemical Engineering, Faculty of Engineering, Universitas Indonesia, Kampus Baru UI, 16424 Depok, Indonesia

Abstract

Background and Objective: In the oil or gas processing plants, the sour well fluid usually contains high CO_2 and is mostly removed from the gas stream through the chemical absorption in the acid gas removal unit (AGRU). The gas released from the regeneration columns in AGRU still contain a high concentration of CO_2 (approximately around 90%) and can environmentally impact the environment. This study aims to provide a process simulation of the small scale DME production plant in order to utilize a high CO_2 acid gas released from typical AGRU in the oil or gas industries. **Materials and Methods:** There are two routes that can be applied in the simulation, namely direct and indirect processes. In the indirect process the production of methanol and DME were done on separate reactors, whilst in the direct process, the production of methanol and DME were done in the same reactor. The reactor temperature and pressure were simulated variables to see their effects on the DME production rates. **Results:** Simulation results showed that the highest DME production rate for indirect and direct processes was achieved at the temperature of 232 and 260°C, respectively. **Conclusion:** The direct process showed a better performance than the indirect process at the reactor pressures of 50 and 60 Bar and reactor temperature above 260°C. The cost of hydrogen is a major investment for both processes since the CO_2 can be obtained freely.

Key words: Well fluid, acid gas removal unit, CO_2 utilization, direct process, indirect process

Citation: Bayu Sari Adji and Sutrasno Kartohardjono, 2017. Process simulation of CO_2 utilization from acid gas removal unit for dimethyl ether production. J. Environ. Sci. Technol., 10: 220-229.

Corresponding Author: Sutrasno Kartohardjono, Process Intensification Laboratory, Department of Chemical Engineering, Faculty of Engineering, Universitas Indonesia, Kampus Baru UI, 16424 Depok, Indonesia Tel: +6285881455943

Competing Interest: The authors have declared that no competing interest exists.

Data Availability: All relevant data are within the paper and its supporting information files.

INTRODUCTION

The sour well fluid in the oil or gas processing plants usually contains high CO_2 and sometimes small amount of H_2S and is mostly removed from the gas stream through the chemical absorption in the acid gas removal unit (AGRU)[1]. The gas released from the regeneration columns in AGRU still contain a high concentration of CO_2, water, light hydrocarbon gases and some non-condensable gas. The high CO_2 content release can seriously impact the environment, especially a major cause of climate change[2], therefore, the idea of utilization CO_2 can recycle the carbon and provide green energy source[3]. One of the most efficient way to utilize CO_2 is to make it as raw material for the production of valuable products such as methanol[4]. Furthermore, methanol can be synthesized to dimethyl ether (DME).

DME, the simplest ether, is a volatile organic compound but is non-carcinogenic, non-teratogenic, non-mutagenic and non-toxic[5]. Liquefied DME can have similar characteristics to those of liquefied petroleum gas (LPG). As an alternative to diesel fuel, DME can produce almost smoke-free combustion and very low NOx emissions[6]. The DME has been commercially used as a high-grade propellant for various health care products. It is better than the use of CFCs, which could cause the depletion of the ozone layer. Currently, the DME key market as a fuel is for the LPG blend stock, transportation as a diesel substitute, power generation fuel that use gas turbines and intermediate for Olefin and gasoline production[7].

The synthesis of dimethyl ether (DME) from carbon containing raw material is of interest to many researchers via the conversion of syngas[8]. It is considered a promising compound to decrease the pollutant and alternative fuel from the crude oil dependent[9]. The dimethyl ether (DME) has potential use as a multi purpose fuel, as a diesel substitute, household heating fuel and household cooking fuel[10]. Therefore, new and more economical routes of producing DME are still being researched[11]. This study aims to provide the process simulation of the small scale DME production plant in order to utilize high CO_2 acid gas released from typical AGRU. Therefore, a green energy sources expected can be produced, which support a healthier environment in the current oil and gas processing industries.

MATERIALS AND METHODS

The DME can be produced from the dehydration of methanol over an acidic catalyst as shown in Eq. 1[12]. Meanwhile, methanol can be produced by the hydrogenation of CO or CO_2 over a Cu-based catalyst in a separated reactor or produced from synthesis gas as shown in Eq. 2 and 3, respectively[13]. Alternatively, DME can be synthesized directly from synthesis gas using a dual-functional catalyst system that permits both the methanol synthesis (over a Cu-based catalyst) and the dehydration (over an acidic catalyst) in a single reactor[14]. The direct synthesis of DME from CO_2 was reported to have major thermodynamic advantages over the two step process, involving the consecutive methanol synthesis and dehydration reactions[15]. The Syngas conversion to methanol is significantly limited by equilibrium, further conversion of methanol to DME shifts the equilibrium toward more methanol formation and allows higher single-pass conversion of methanol. Hence, the direct DME synthesis is thermodynamically more favorable than the two-step process[16]:

$$2CH_3OH \leftrightarrow CH_3OCH_3 + H_2O \quad \Delta H^{\circ}_{rxn} = -23 \text{ kJ mole}^{-1} \tag{1}$$

$$CO_2 + 3H_2 \leftrightarrow CH_3OH + H_2O \quad \Delta H^{\circ}_{rxn} = -49 \text{ kJ mole}^{-1} \tag{2}$$

$$CO + 2H_2 \leftrightarrow CH_3OH \quad \Delta H^{\circ}_{rxn} = -90 \text{ kJ mole}^{-1} \tag{3}$$

$$CO + H_2O \leftrightarrow CO_2 + H_2 \quad \Delta H^{\circ}_{rxn} = -41 \text{ kJ mole}^{-1} \tag{4}$$

The Simulator Unisim Design R390.1 is used to model the process. The indirect conversion route converts initially the CO_2 rich gas feed stream into the methanol and then separate the methanol from the water in the distillation column. The high purity methanol stream is directed to the DME conversion packed bed reactor. The direct conversion route feeds the acid gas stream to a dual-functional reactor where both the methanol and DME are produced in a single bed reactor. Both simplified processes schematics are shown in Fig. 1 and 2, respectively.

The feed gas which contains high CO_2 is taken from the released gas from regeneration column of a typical AGRU unit in the Gas processing plant that treats high CO_2 wells. In this simulation study the feed gas composition is shown in Table 1.

The feed gas flow rate used in the simulation study is set to be 5 MMSCFD as the current initiative is to investigate the idea of a small scale DME plant, which is CO_2 gas flow rate from the typical AGRU regeneration column in midsize oil and gas field. Meanwhile, the gas condition is shown in Table 2. The attractiveness of the implementation of

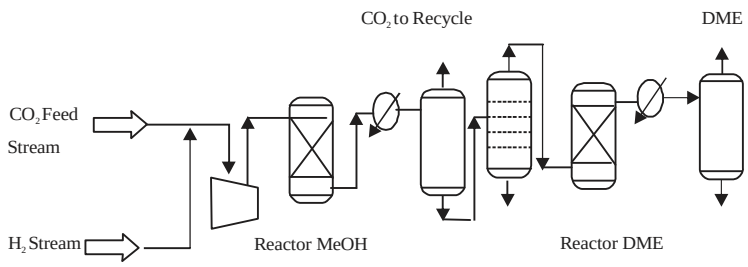

Fig.1: Schematic diagram of indirect DME production process

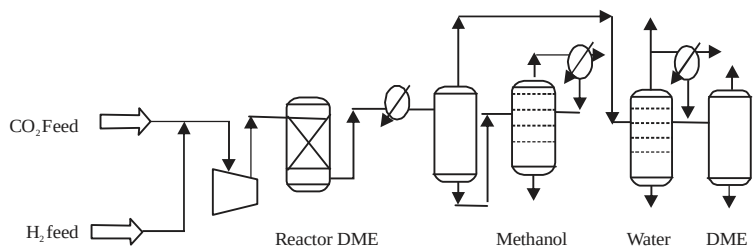

Fig. 2: Schematic diagram of direct DME production process

Table 1: Feed gas composition of the CO_2 rich gas stream

No	Composition	Mole (%)
1	CO_2	86.5923
2	H_2O	11.3495
3	CH_4	2.0523
4	C_2H_6	0.0057
5	C_3H_8	0.0002

Table 2: Feed gas operating condition

No	Parameter	Value
1	Pressure (Bar)	1.2
2	Temperature (°C)	80
3	Flow of CO_2 stream (MMSCFD)	5
4	Flow of H_2 stream (MMSCFD)	10

CO_2 to the DME conversion technology in a small scale plant process simulation was expected as an effort to reduce the green house gas from CO_2 emission in the oil and gas industries.

The flow of H_2 stream was varied to investigate the effect of the hydrogen flow rate at a temperature reactor of 260°C. Meanwhile, the pressure in the reactor is set at 50 Bar. The effect of the pressure in the reactor at a fixed temperature of 260°C was investigated by varying the pressure from 40-60 Bar, while the DME reactor is always set at 288°C and 19 Bar.

The kinetic correlation based on Graaf *et al.*[17] for the methanol synthesis and Bercic-Levec for the methanol dehydration or the DME synthesis were used to model the process.

$$r'_{CH3OH,A3} = \frac{k'_{ps,A3} K_{CO}\left[f_{CO} f_{H_2}^{\frac{3}{2}} - \frac{f_{CH_3OH}}{f_{H_2}^{1/2} k_{P_1}^{0}}\right]}{\left(1 + K_{CO} f_{CO} + K_{CO_2}\right)\left[f_{H_2}^{1/2} + \left(\frac{K_{H_2O}}{K_{H_2}^{1/2}}\right) f_{H_2O}\right]} \quad (5)$$

$$r'_{H_2O,B2} = \frac{k'_{ps,B2} K_{CO_2}\left[f_{co_2} f_{H_2} - \frac{f_{H_2O} f_{CO}}{K_{P_2}^{0}}\right]}{\left(1 + K_{CO} f_{CO} + K_{CO_2} f_{CO_2}\right)\left[f_{H_2}^{1/2} + \left(\frac{K_{H_2O}}{K_{H_2}^{1/2}}\right) f_{H_2O}\right]} \quad (6)$$

$$r'_{CH_3OH,C3} = \frac{k'_{ps,C3} K_{CO_2}\left[f_{co_2} f_{H_2}^{\frac{3}{2}} - \frac{f_{CH_3OH} f_{H_2O}}{f_{H_2}^{3/2} K_{P_3}^{0}}\right]}{\left(1 + K_{CO} f_{CO} + K_{CO_2} f_{CO_2}\right)\left[f_{H_2}^{1/2} + \left(\frac{K_{H_2O}}{K_{H_2}^{1/2}}\right) f_{H_2O}\right]} \quad (7)$$

$$-r_{CH_3OH} = \frac{k K_{CH_3OH}^{2}\left[C_{CH_3OH}^{2} - \frac{C_{DME} C_{H_2O}}{K}\right]}{\left(1 + 2\left(K_{CH_3OH} C_{CH_3OH}\right)^{\frac{1}{2}} + K_{H_2O} C_{H_2O}\right)^{4}} \quad (8)$$

Where:

$k'_{ps,A3}$: Pseudo-reaction rate constant for reaction A (mole s^{-1} kg^{-1} Bar^{-1})

$k'_{ps,B2}$: Pseudo-reaction rate constant for reaction B (mole s^{-1} kg^{-1} $Bar^{-1/2}$)

$k'_{ps,C3}$: Pseudo-reaction rate constant for reaction C (mole s^{-1} kg^{-1} Bar^{-1})
k''' : Pseudo first order rate constant based on catalyst volume (s^{-1})
K : Adsorption equilibrium constant (Bar^{-1})
K_{eq} : Pseudo first order equilibrium constant
K_P : Chemical equilibrium constant based on partial pressures
K_C : Chemical equilibrium constant based on concentrations

RESULTS AND DISCUSSION

The simulator UniSim Design R390.1 is used in this study to simulate the DME production in the direct and indirect processes using Peng-Robinson-Stryjek-Vera (PRSV) EOS. The UniSim model of the indirect conversion with a single packed bed reactor is shown in Fig. 3. The feed gas, which comes from the AGRU regenerator column, is near the atmospheric condition. It will need to be compressed to the reactor condition, in Graaf *et al.*[18] it is compressed until around 85 Bar and temperature of 220-278°C (428-532°F). In the simulation the operating pressure was set at 50 Bar and temperature inlet to the first reactor is set at 260°C (500°F) as the base case.

The reactor type is a heterogeneous catalytic model in the UniSim using the Langmuir Hinshelwood Hougen-Watson (LHHW) kinetic equation model, which was developed by Graaf *et al.*[18]. The molar flow rate of CO_2 feed into the reactor was at 215.47 k mole h^{-1} (5 MMSCFD) and the exit in the reactor remains at 191.15 k mole h^{-1}. The simulation shows that the single packed bed reactor can convert the CO_2 with a single pass conversion of 11%, whilst the H_2 conversion is 14.6%. The Methanol production can achieve 30.3 k mole h^{-1} or 23.2 tonne/day in the methanol synthesis reactor (R1), whilst the DME production in the DME reactor (R2) can achieve 11.4 k mole h^{-1} or 12.6 tonne/day as shown in Fig. 4 and 5, respectively.

Figure 4 shows that at a temperature of 177°C, the methanol production is very small and considered to be insignificant, thus the methanol production will appear at a temperature above 177°C and increase up to 230°C at a Pressure less than 50 Bar. This is due to the increase in the activity of the methanol reaction kinetics. An optimal operating region appears due to the kinetic limitations at lower temperatures versus equilibrium limitations at higher temperatures[19,20]. Figure 4 also shows that the methanol production increases with the operating pressure in the reactor due to the fact that the CO_2 hydrogenation reaction proceeds with a decrease in the total number of moles as shown by Eq. 2. Consequently, more CO_2 is converted to methanol at higher pressures. However, increasing the reactor pressure must be compensated by more investment for the compressor cost and the thicker wall of the reactor vessel. This was also emphasized by Da Silva *et al.*[21] that the CO_2 hydrogenation to methanol is limited by thermodynamics, where the equilibrium favored to the products at higher pressures and a lower temperature. However, the catalytic activity is significantly reduced when the lower temperatures are used, which suggests the existence of kinetic limitations for this type of catalyst.

The CO_2 conversion in the methanol reactor, as shown in the Fig. 6, involves three reactions of Equation 2 and 3 and reverse water gas shift reaction of Eq. 4[18,22]. The CO production rate from CO_2 is increasing as reactions is endothermic whilst the methanol rate is decreasing. The methanol conversion is decreasing after 230°C, whilst the CO production is rapidly increasing and aligned with the experiment conducted by Kiss *et al.*[19].

The effect of temperature in the methanol reactor for the DME production in the indirect process is shown in Fig. 5. The production of DME at a lower temperature than 177°C is very small and is increasing to the peak at 232°C as the catalytic reaction becomes more active. However, it is reduced when the inlet temperature of the reactor is higher than 232°C due to the exothermic reaction characteristic. It is indicated that the temperature around 232°C was the optimum conversion which balances both the kinetic and thermodynamic constrains. In this study, the DME product purity higher than 99% was achieved. This purity level has been used as a minimum target as well as in the previous study[23]. Figure 5 also shows that the production of DME increases with the operating pressure in the reactor and similar to the methanol reactor must be compensated by increasing the costs of the compressor and the reactor vessel.

The UniSim model of the DME production through direct process was developed as shown in Fig. 7. The kinetic model set in the single packed bed reactor for both correlations using Graaf *et al.*[17] for the methanol reaction and DME synthesis, which used Bercic and Levec kinetic correlations[24].

The different configuration direct process simulation model to the indirect process route is the use of a single packed bed reactor for both the methanol and DME synthesis reaction and this is the major investment reduction of implementing the direct route process. The direct process gained more attention due to its economic superiority and lower initial investment[25]. However, the separation of DME in the same gas phase with the other remaining un-reacted gases is more difficult. In the indirect process, the methanol can be easily separated as a liquid phase by reducing the temperature and can be separated from the unreacted gases

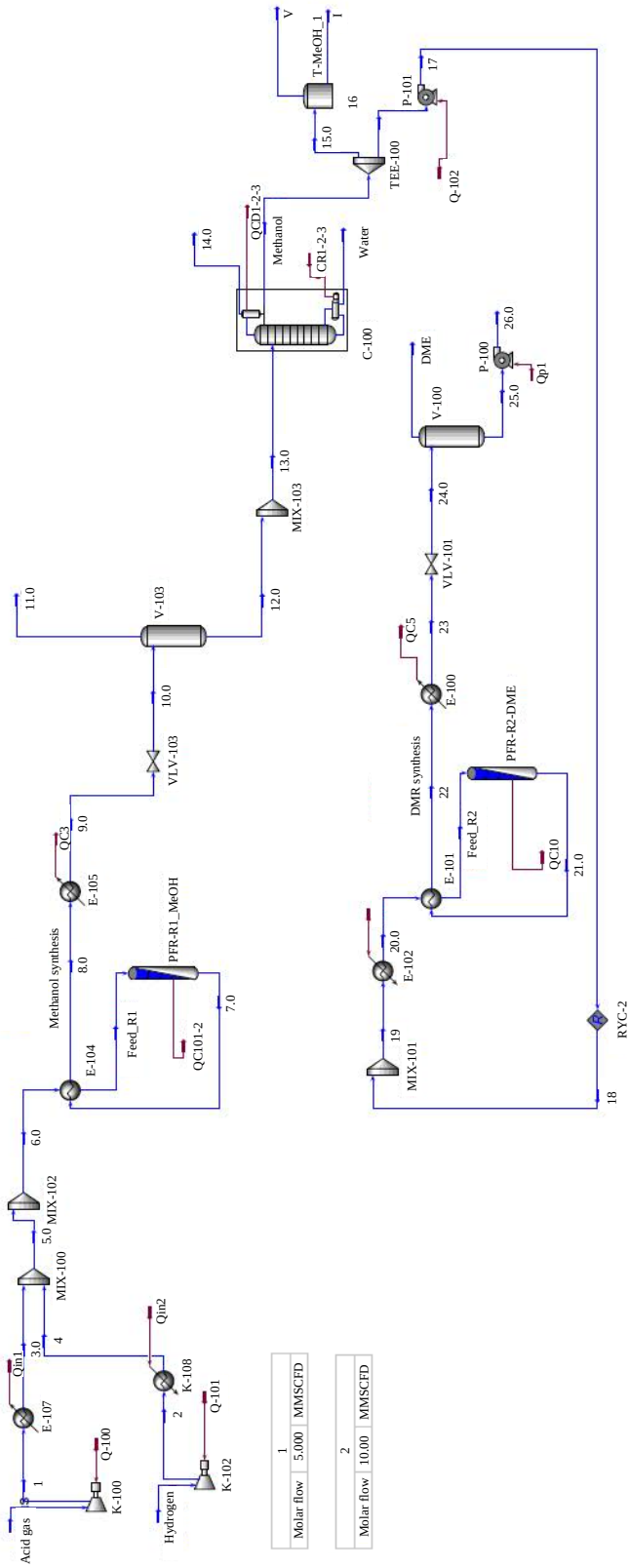

Fig. 3: Flow diagram of single packed bed methanol reactor and DME reactor (Blue line: Material stream and Red line: Energy stream)

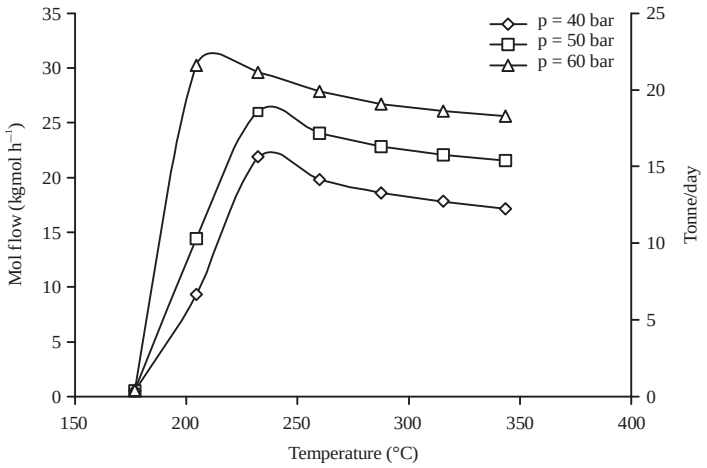

Fig. 4: Methanol production as a function of reactor temperature (T) at various pressures (p) for indirect process

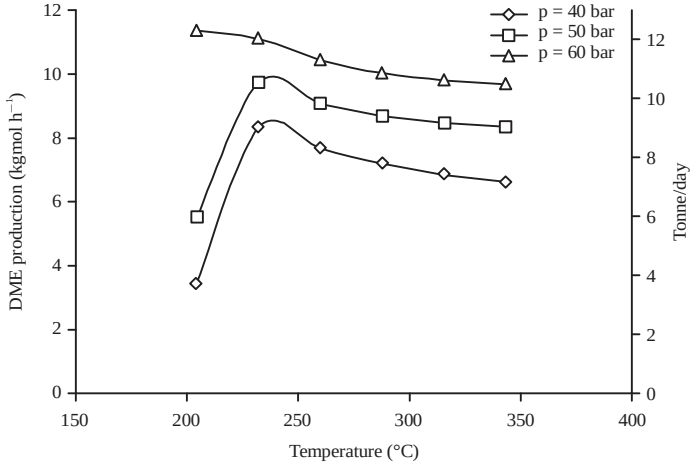

Fig. 5: DME production as a function of reactor temperature (T) at various pressures (p) for indirect process

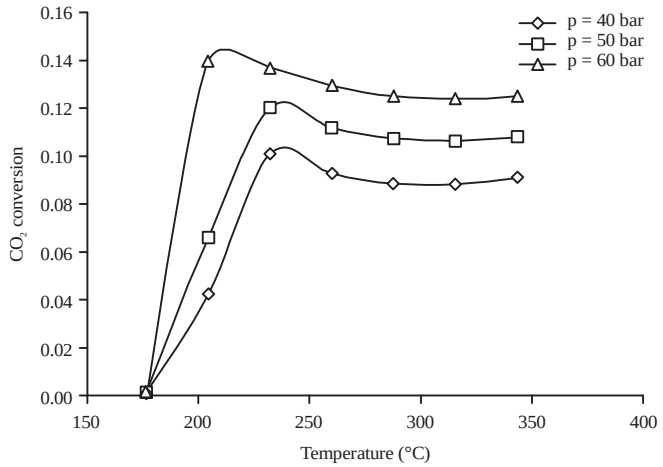

Fig. 6: CO_2 conversion as a function of reactor temperature (T) at various pressures (p) for indirect process

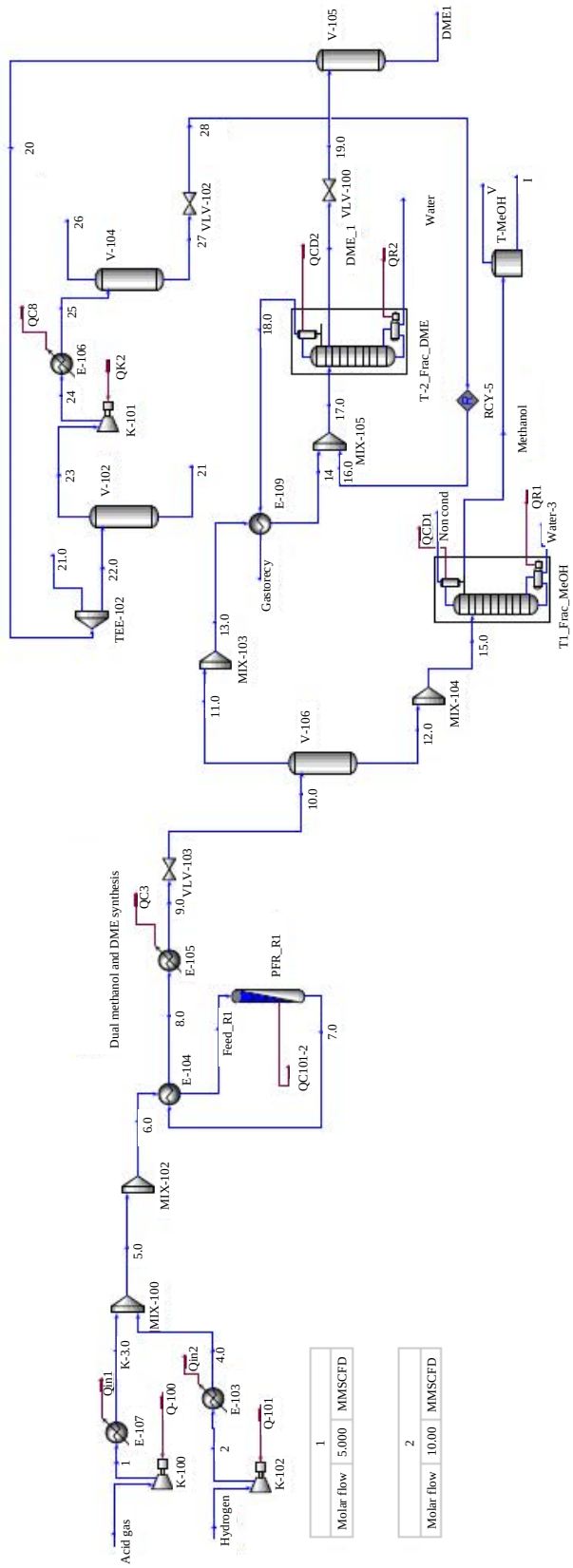

Fig.7: Flow diagram in UniSim for DME production through direct process (Blue line: Material stream and Red line: Energy stream)

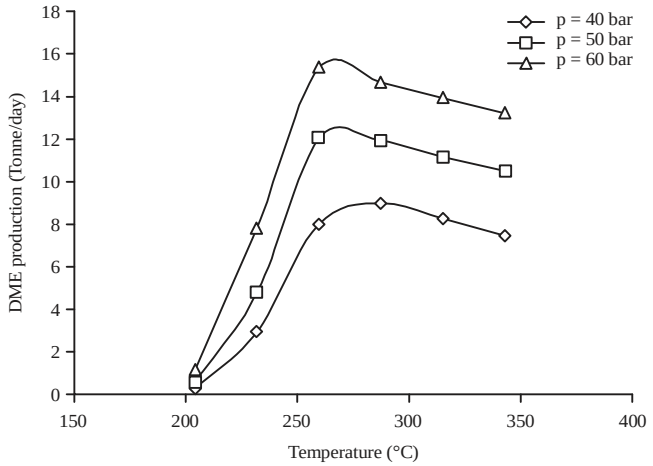

Fig. 8: DME production as a function of temperature (T) at various reactor pressures (p) for direct process

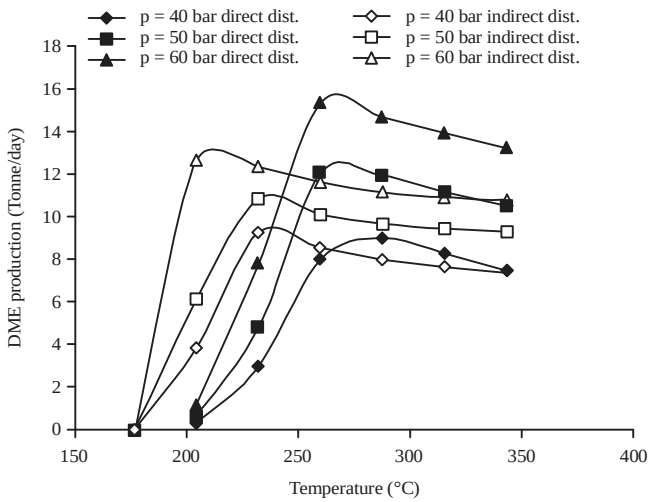

Fig. 9: DME production as a function of reactor temperature (T) at various reactor pressures (p) for direct and indirect processes

in the gas-liquid separator. Although the cost can be higher for the separation system in the direct process, however, it is compensated by a significant increase in the production of DME compared to the indirect route process. The utilization of the heat exchanger as an economizer, using the hot gas coming off from the reactor, prior to both reactors can adjust the inlet stream temperature to obtain the optimum condition. Therefore, it will eliminate the investment of the additional heating to preheat the gas in the operation. The simulation result, as shown in Fig. 8, shows that the peak production of DME is reached at the inlet feed gas temperature to the reactor of about 288°C for the pressure less than 60 Bar. A similar result was also shown by Dadgar *et al.*[15] where the CO_2-to-DME hydrogenation reaction showed that the DME production increased with the temperature and the best performance of the CZZ-FER system was at 280°C. However, for the higher pressure, the temperature of 260°C will produce the higher DME product as the balance of both the kinetic and thermodynamic factors.

Figure 9 shows that the DME production through the direct process is superior to indirect process at the reactor pressures of 50 and 60 Bar and the temperature higher than 260°C. Table 3 showed the DME products at various pressures and temperatures of Reactor and it shows that the highest production rate of the direct process is almost 20% higher than the highest production rate of the indirect process. The investment of the additional separation units in the direct process must be considered in the feasibility study. However, it seems that the direct reaction has benefited from its high DME production result in converting CO_2 emission from the AGRU in the standard oil or natural gas industries.

Table 3: DME production from 5 MMSCFD CO_2 and 10 MMSCFD H_2 feed gases at various pressures and temperatures for both direct and indirect processes

		Temperature (°F)					
Pressure R1	DME Production	204	232	260	288	316	343
Indirect process							
40 (bar)	k mole h^{-1}	3.46	8.33	7.69	7.20	6.88	6.62
	Kg h^{-1}	160.30	385.90	355.70	333.10	318.40	306.40
	Tonne/day	3.85	9.26	8.54	7.99	7.64	7.35
50 (bar)	k mole h^{-1}	5.52	9.75	9.09	8.71	8.49	8.36
	Kg h^{-1}	255.70	451.30	420.90	403.10	393.20	386.90
	Tonne/day	6.14	10.83	10.10	9.67	9.44	9.29
60 (bar)	k mole h^{-1}	11.37	11.11	10.45	10.03	9.82	9.69
	Kg h^{-1}	526.60	514.80	484.20	464.60	454.60	448.90
	Tonne/day	12.64	12.36	11.62	11.15	10.91	10.77
Direct Process							
40 (bar)	k mole h^{-1}	0.25	2.67	7.244	8.145	7.493	6.747
	Kg h^{-1}	11.37	123.14	333.73	375.23	345.20	310.83
	Tonne/day	0.27	2.96	8.01	9.01	8.28	7.46
50 (bar)	k mole h^{-1}	0.56	4.34	10.91	10.79	10.11	9.52
	Kg h^{-1}	25.96	200.03	502.62	497.09	465.76	438.58
	Tonne/day	0.62	4.8	12.06	11.93	11.18	10.53
60 (bar)	k mole h^{-1}	1.06	7.08	13.88	13.26	12.60	11.97
	Kg h^{-1}	48.90	326.17	639.45	610.88	580.48	551.45
	Tonne/day	1.17	7.83	15.35	14.66	13.93	13.23

CONCLUSION

The simulation results show that both the direct and indirect processes can be applied to utilize CO_2 emitted from the AGRU in the oil or natural gas industries to produce DME. Based on the simulation results, the peak methanol and DME products in the indirect process were achieved at the reactor temperature around 232°C. Meanwhile, the highest DME product in the direct process was achieved at the reactor temperature around 260°C. The direct process produced a higher DME product than the indirect process at reactor pressures of 50 and 60 Bar and reactor temperature higher than 260°C. The cost of hydrogen is part of the major investment for both processes since the CO_2 is considered to be free supply from AGRU.

SIGNIFICANCE STATEMENTS

This study discovers the way to utilize CO_2 emitted from the acid gas removal unit in oil or gas industries to produce dimethyl ether (DME) that can be beneficial to reduce CO_2 emission to the atmosphere. This study will help the researcher to more intensively utilize industrial CO_2 emissions to produce valuable chemicals.

REFERENCES

1. Kartohardjono, S., K.A. Sembiring, Rexy, R. Syandika, F. Ghasani and N. Saksono, 2017. CO_2 absorption from its mixture through super-hydrophobic membrane contactor. J. Environ. Sci. Technol., 10: 25-34.
2. Kang, G., Z.P. Chan, S.B.M. Saleh and Y. Cao, 2017. Removal of high concentration CO_2 from natural gas using high pressure membrane contactors. Int. J. Greenhouse Gas Control, 60: 1-9.
3. Rachpitak, W., K. Siemanond, A. Henni and R. Chunvaree, 2016. Simulation/Optimization of Carbon Dioxide Capture Plant: A Case Study of AGRU from Thailand. In: Computer Aided Chemical Engineering, Volume 38, Kravanja, Z. and M. Bogataj (Eds.). Elsevier, New York, USA., ISBN-13: 978-0-444-63428-3, pp: 1707-1712.
4. Luu, M.T., D. Milani and A. Abbas, 2016. Analysis of CO_2 utilization for methanol synthesis integrated with enhanced gas recovery. J. Cleaner Prod., 112: 3540-3554.
5. Semelsberger, T.A., R.L. Borup and H.L. Greene, 2006. Dimethyl ether (DME) as an alternative fuel. J. Power Sour., 156: 497-511.
6. Arcoumanis, C., C. Bae, R. Crookes and E. Kinoshita, 2008. The potential of Di-Methyl Ether (DME) as an alternative fuel for compression-ignition engines: A review. Fuel, 87: 1014-1030.
7. Fleisch, T.H., A. Basu and R.A. Sills, 2012. Introduction and advancement of a new clean global fuel: The status of DME developments in China and beyond. J. Nat. Gas Sci. Eng., 9: 94-107.
8. Ateka, A., P. Perez-Uriarte, M. Gamero, J. Erena, A.T. Aguayo and J. Bilbao, 2017. A comparative thermodynamic study on the CO_2 conversion in the synthesis of methanol and of DME. Energy, 120: 796-804.
9. Sun, J., G. Yang, Y. Yoneyama and N. Tsubaki, 2014. Catalysis chemistry of dimethyl ether synthesis. ACS Catal., 4: 3346-3356.
10. Park, S., H. Kim and B. Choi, 2010. Effective parameters for DME steam reforming catalysts for the formation of H_2 and CO. J. Ind. Eng. Chem., 16: 734-740.

11. Semelsberger, T.A. and R.L. Borup, 2006. Thermodynamic equilibrium calculations of hydrogen production from the combined processes of dimethyl ether steam reforming and partial oxidation. J. Power Sour., 155: 340-352.
12. Vanoye, L., A. Favre-Reguillon, P. Munno, J.F. Rodriguez and S. Dupuy *et al*., 2013. Methanol dehydration over commercially available zeolites: Effect of hydrophobicity. Catal. Today, 215: 239-242.
13. Melian-Cabrera, I., M.L. Granados and J.L.G. Fierro, 2002. Pd-modified Cu-Zn catalysts for methanol synthesis from CO_2/H_2 mixtures: Catalytic structures and performance. J. Catal., 210: 285-294.
14. Erena, J., R. Garona, J.M. Arandes, A.T. Aguayo and J. Bilbao, 2005. Effect of operating conditions on the synthesis of dimethyl ether over a CuO-ZnO-Al_2O_3/NaHZSM-5 bifunctional catalyst. Catal. Today, 107: 467-473.
15. Frusteri, F., M. Migliori, C. Cannilla, L. Frusteri and E. Catizzone *et al*., 2017. Direct CO_2-to-DME hydrogenation reaction: New evidences of a superior behaviour of FER-based hybrid systems to obtain high DME yield. J. CO_2 Util., 18: 353-361.
16. Dadgar, F., R. Myrstad, P. Pfeifer, A. Holmen and H.J. Venvik, 2016. Direct dimethyl ether synthesis from synthesis gas: The influence of methanol dehydration on methanol synthesis reaction. Catal. Today, 270: 76-84.
17. Graaf, G.H., E.J. Stamhuis and A.A.C.M. Beenackers, 1988. Kinetics of low-pressure methanol synthesis. Chem. Eng. Sci., 43: 3185-3195.
18. Graaf, G.H. and A.A.C.M. Beenackers, 1996. Comparison of two-phase and three-phase methanol synthesis processes. Chem. Eng. Process.: Process Intensification, 35: 413-427.
19. Kiss, A.A., J.J. Pragt, H.J. Vos, G. Bargeman and M.T. de Groot, 2016. Novel efficient process for methanol synthesis by CO_2 hydrogenation. Chem. Eng. J., 284: 260-269.
20. Bonura, G., C. Cannilla, L. Frusteri, A. Mezzapica and F. Frusteri, 2017. DME production by CO_2 hydrogenation: Key factors affecting the behaviour of CuZnZr/ferrierite catalysts. Catal. Today, 281: 337-344.
21. Da Silva, R.J., A.F. Pimentel, R.S. Monteiro and C.J. Mota, 2016. Synthesis of methanol and dimethyl ether from the CO_2 hydrogenation over Cu•ZnO supported on Al_2O_3 and Nb_2O_5. J. CO_2 Util., 15: 83-88.
22. Park, N., M.J. Park, Y.J. Lee, K.S. Ha and K.W. Jun, 2014. Kinetic modeling of methanol synthesis over commercial catalysts based on three-site adsorption. Fuel Process. Technol., 125: 139-147.
23. Zhang, Y., S. Zhang and T. Benson, 2015. A conceptual design by integrating dimethyl ether (DME) production with tri-reforming process for CO_2 emission reduction. Fuel Process. Technol., 131: 7-13.
24. Bercic, G. and J. Levec, 1992. Intrinsic and global reaction rate of methanol dehydration over γAl_2O_3 pellets. Ind. Eng. Chem. Res., 31: 1035-1040.
25. Vakili, R., M.R. Rahimpour and R. Eslamloueyan, 2012. Incorporating differential evolution (DE) optimization strategy to boost hydrogen and DME production rate through a membrane assisted single-step DME heat exchanger reactor. J. Nat. Gas Sci. Eng., 9: 28-38.